PACKAGING CORPORATION OF AMERICA
PITTSBURGH, PENNSYLVANIA PLANT
ELECTRIC SERVICE UPGRADE

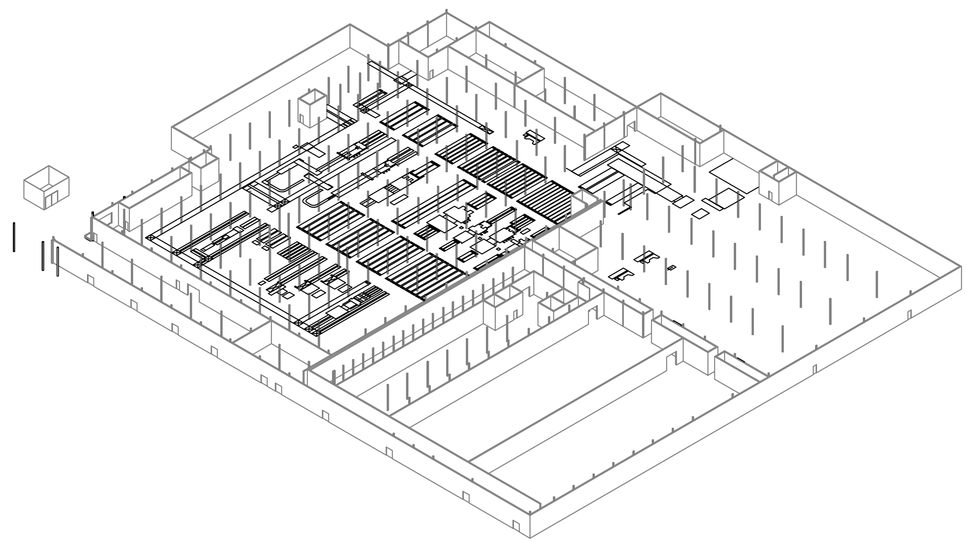

DRAWING INDEX

E0.01	ELECTRICAL COVER SHEET
E1.01	ELECTRICAL SITE PLAN
E1.02	ELECTRICAL OVERALL BLDG PLAN
E1.03	ELECTRICAL ROOM ENLARGED FLOOR PLAN
E1.04	SWITCHGEAR ISOMETRIC ELEVATIONS
E2.01	ELECTRICAL EXISTING 1-LINE DIAGRAM
E2.02	ELECTRICAL PROPOSED 1-LINE DIAGRAM

EMBOSSED SEAL

INDUSTRIAL ENGINEERING, INC.
11451 Valley Creek Road, Suite 200
Woodbury, MN 55129
Phone (651) 436-1945
FAX (651) 436.1947
website: www.indengr.com
email: Engineering@indengr.com

COMMONWEALTH OF PENNSYLVANIA
REGISTERED PROFESSIONAL
DAVID A. EXE
ENGINEER
PE077394

February 17, 2010

ELECTRICAL SERVICE UPGRADE
1 28th Street
Pittsburgh, Pennsylvania 15222

Owner:
PACKAGING CORPORATION OF AMERICA
1 28th Street
Pittsburgh, Pennsylvania 15222

MARK	DATE	DESCRIPTION

PROJECT NO: 18802
FILENAME: 18802E0.01
DRAWN BY: dae
CHECKED BY: dae
COPYRIGHT: Industrial Engineering, Inc.
DWG DATE: February 17, 2010
SHEET TITLE
ELECTRICAL COVER SHEET

E0.01

2/17/2010 9:25:19 AM

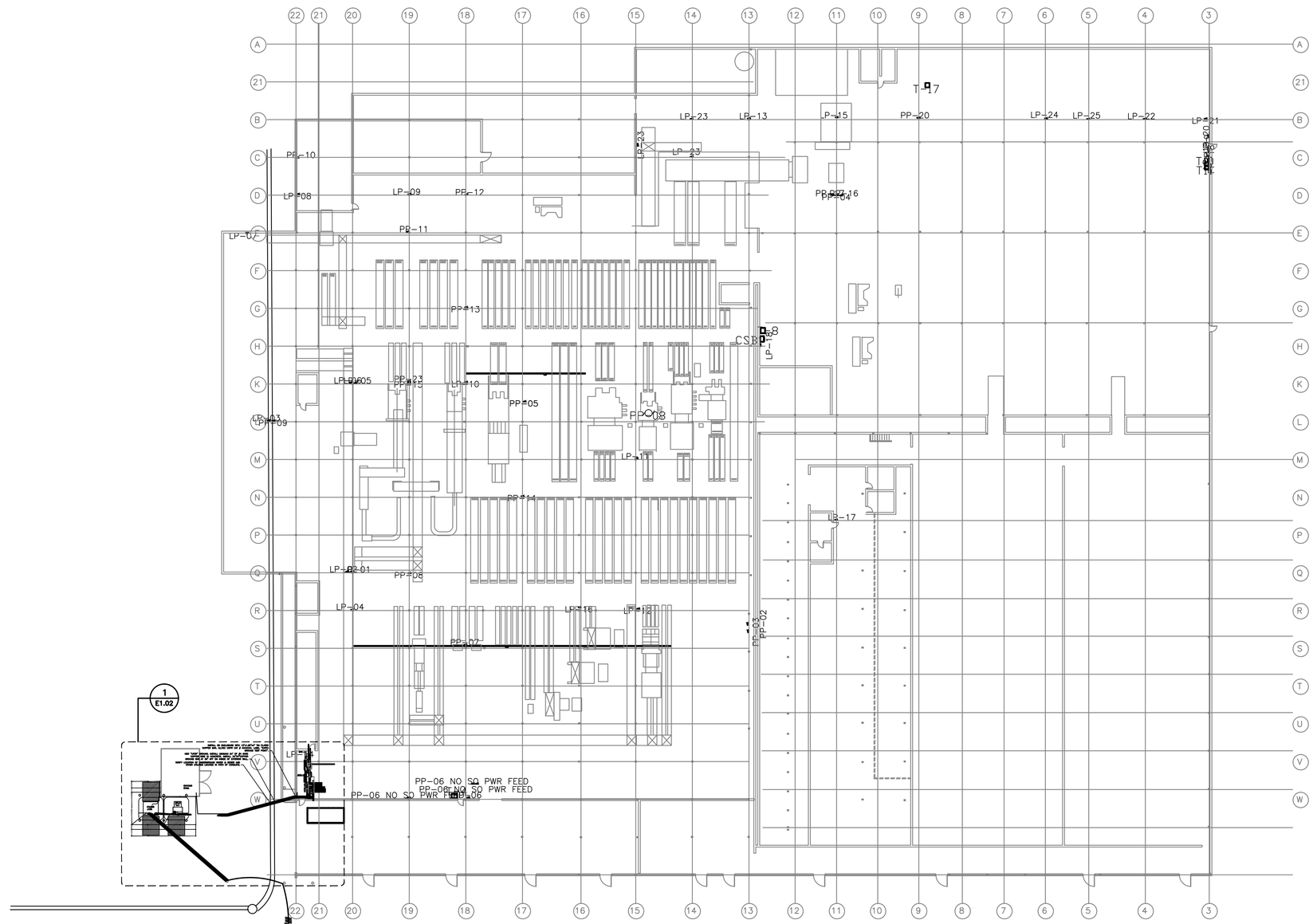

1 E1.01 ELECTRICAL FLOOR PLAN

SCALE: 0' 32'

INDUSTRIAL ENGINEERING, INC.
11451 Valley Creek Road, Suite 200
Woodbury, MN 55129
Phone (651) 436-1945
FAX (651) 436.1947
website: www.indengr.com
email: Engineering@indengr.com

COMMONWEALTH OF PENNSYLVANIA
REGISTERED PROFESSIONAL
DAVID A. EXE
ENGINEER
PE077394

February 17, 2010

ELECTRICAL SERVICE UPGRADE
1 28th Street
Pittsburgh, Pennsylvania 15222

Owner:
PACKAGING CORPORATION OF AMERICA
1 28th Street
Pittsburgh, Pennsylvania 15222

MARK	DATE	DESCRIPTION

PROJECT NO:	18802
FILENAME:	18802E1.01
DRAWN BY:	dae
CHECKED BY:	dae
COPYRIGHT:	Industrial Engineering, Inc.
DWG DATE:	February 17, 2010

SHEET TITLE
ELECTRICAL SITE PLAN

E1.01

2/17/2010 9:25:26 AM

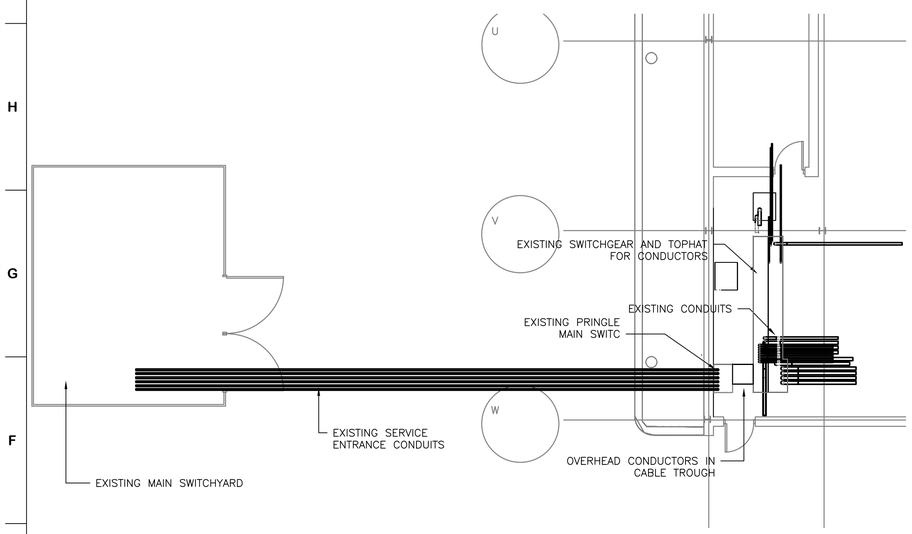

2 E1.02 EXISTING ELECTRICAL PLAN
SCALE: 0' 8'

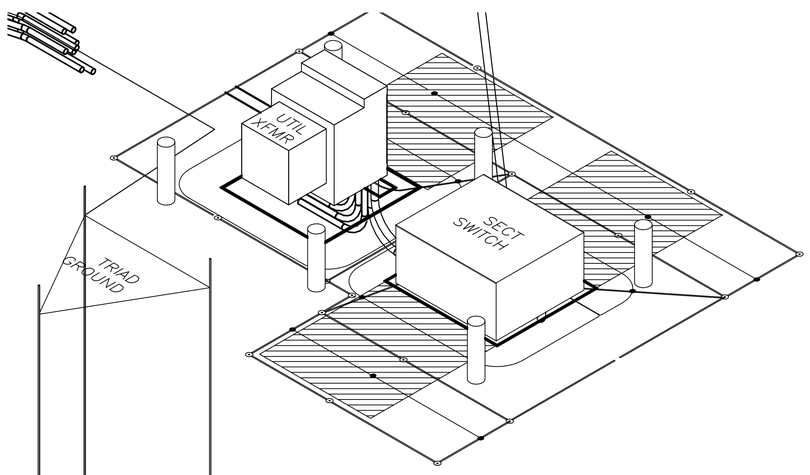

3 E1.02 SWITCHYARD ISOMETRIC
SCALE:

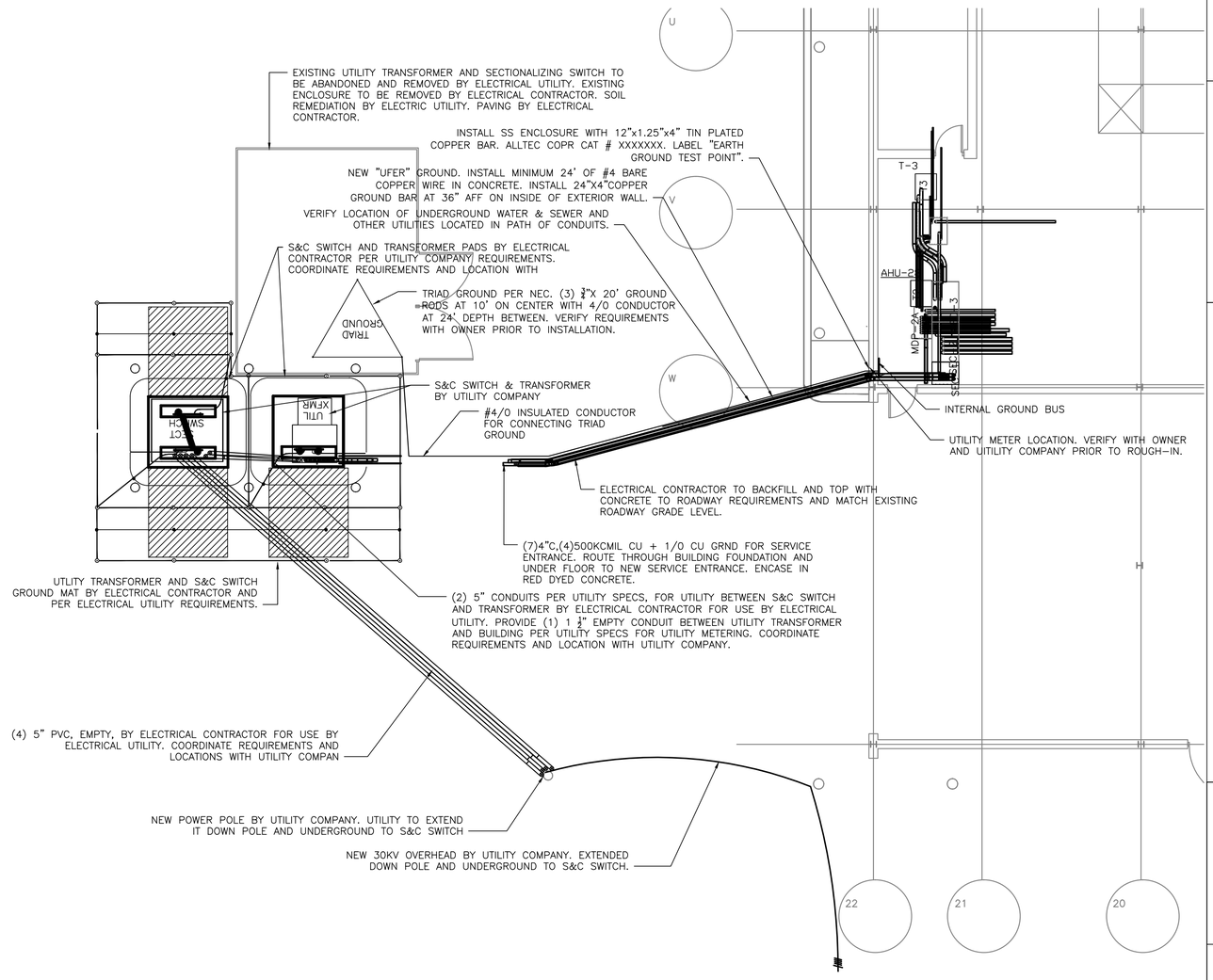

1 E1.02 ELECTRICAL PLAN
SCALE: 0' 8'

INDUSTRIAL ENGINEERING, INC.
11451 Valley Creek Road, Suite 200
Woodbury, MN 55129
Phone (651) 436-1945
FAX (651) 436.1947
website: www.indengr.com
email: Engineering@indengr.com

COMMONWEALTH OF PENNSYLVANIA
REGISTERED PROFESSIONAL
DAVID A. EXE
ENGINEER
PE077394

February 17, 2010

ELECTRICAL SERVICE UPGRADE
1 28th Street
Pittsburgh, Pennsylvania 15222

Owner:
PACKAGING CORPORATION OF AMERICA
1 28th Street
Pittsburgh, Pennsylvania 15222

MARK	DATE	DESCRIPTION

PROJECT NO:	18802
FILENAME:	18802E1.02
DRAWN BY:	dae
CHECKED BY:	dae
COPYRIGHT:	Industrial Engineering, Inc.
DWG DATE:	February 17, 2010

SHEET TITLE
ELECTRICAL OVERALL BLDG FLOOR PLAN

E1.02

2/17/2010 9:25:36 AM

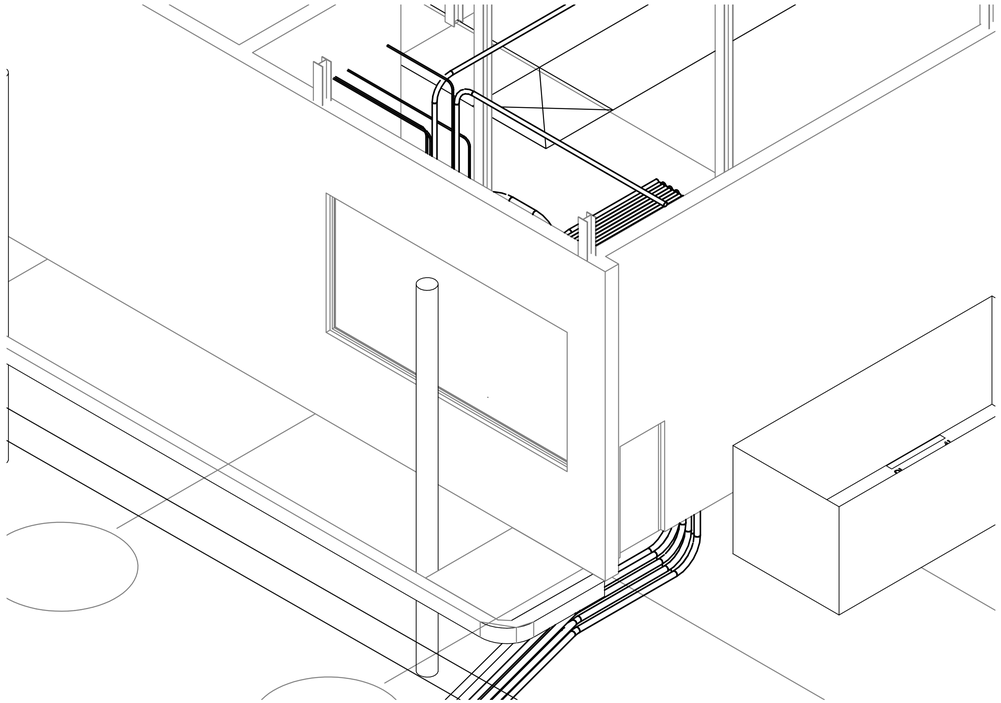

2 E1.03 ELECTRICAL FLOOR PLAN
SCALE: NONE

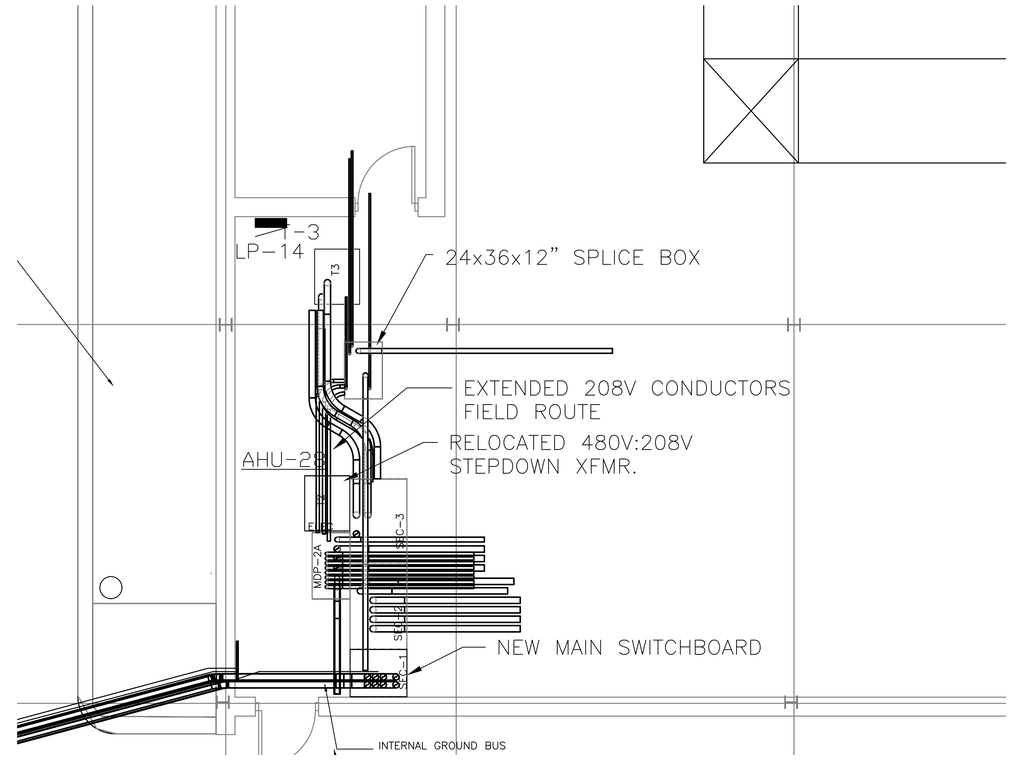

1 E1.03 ELECTRICAL FLOOR PLAN
SCALE: 0' 4'

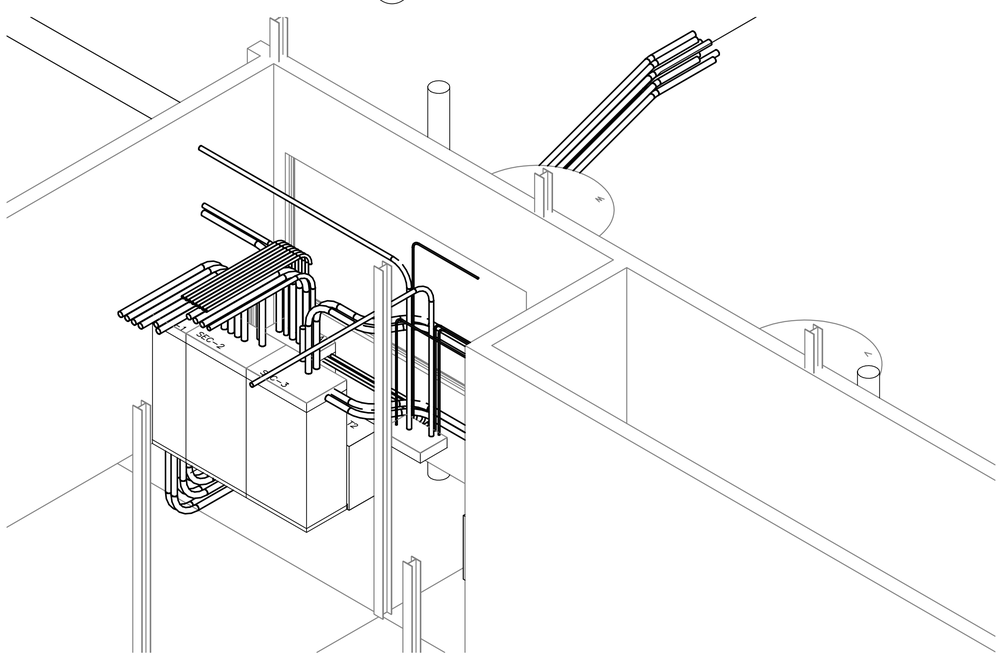

3 E1.03 ELECTRICAL FLOOR PLAN
SCALE: NONE

INDUSTRIAL ENGINEERING, INC.
11451 Valley Creek Road, Suite 200
Woodbury, MN 55129
Phone (651) 436-1945
FAX (651) 436.1947
website: www.indengr.com
email: Engineering@indengr.com

COMMONWEALTH OF PENNSYLVANIA
REGISTERED PROFESSIONAL
DAVID A. EXE
ENGINEER
PE077394

February 17, 2010

ELECTRICAL SERVICE UPGRADE
1 28th Street
Pittsburgh, Pennsylvania 15222

Owner:
PACKAGING CORPORATION OF AMERICA
1 28th Street
Pittsburgh, Pennsylvania 15222

MARK	DATE	DESCRIPTION

PROJECT NO:	18802
FILENAME:	18802E1.03
DRAWN BY:	dae
CHECKED BY:	dae
COPYRIGHT:	Industrial Engineering, Inc.
DWG DATE:	February 17, 2010

SHEET TITLE
ELECTRICAL ROOM ENLARGED FLOOR PLAN

E1.03

2/17/2010 9:25:50 AM

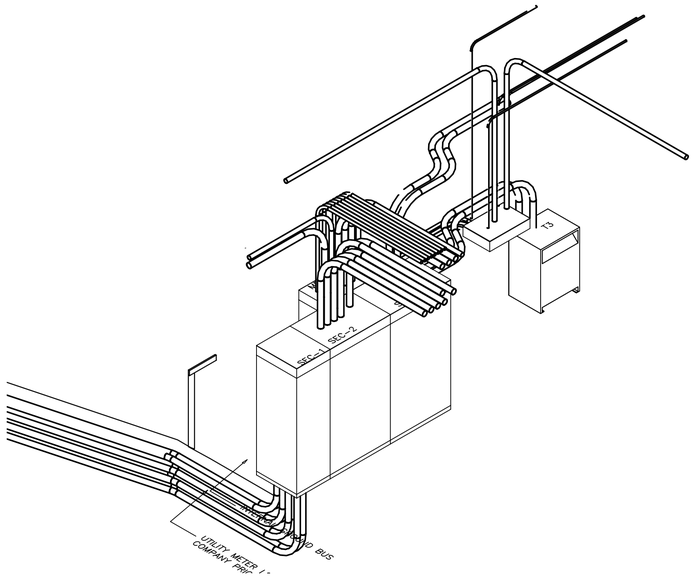

2 E1.04 NE ISO ELEVATION
SCALE: NONE

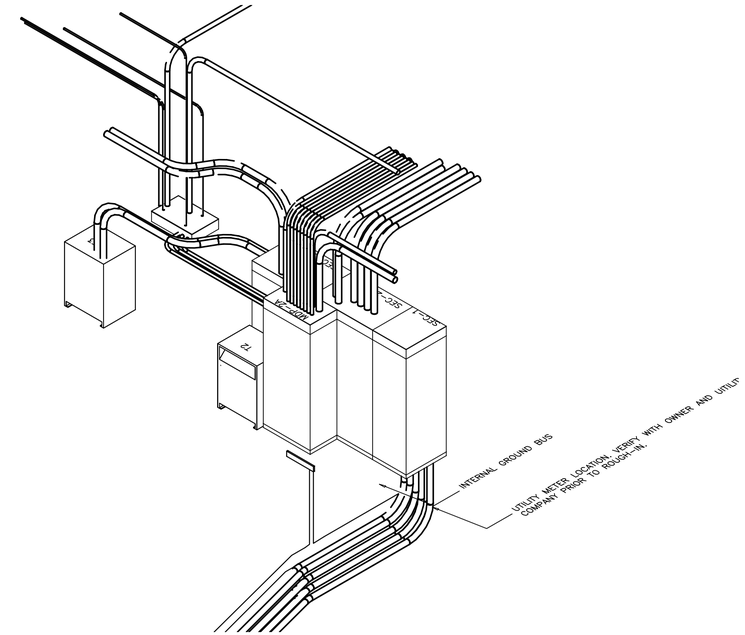

1 E1.04 SE ISO ELEVATION
SCALE: NONE

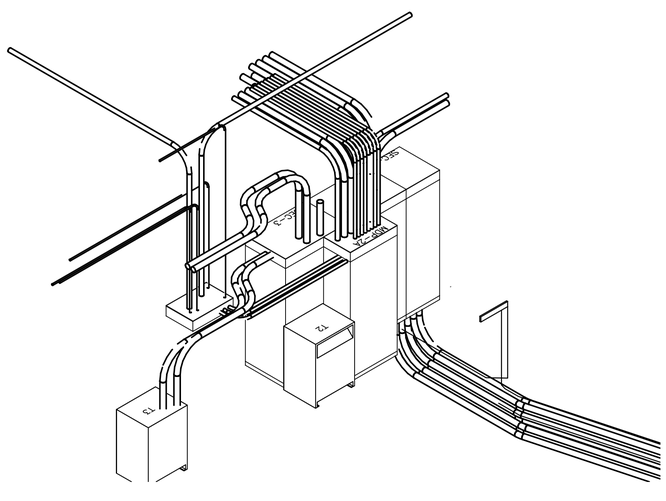

4 E1.04 SW ISO ELEVATION
SCALE: NONE

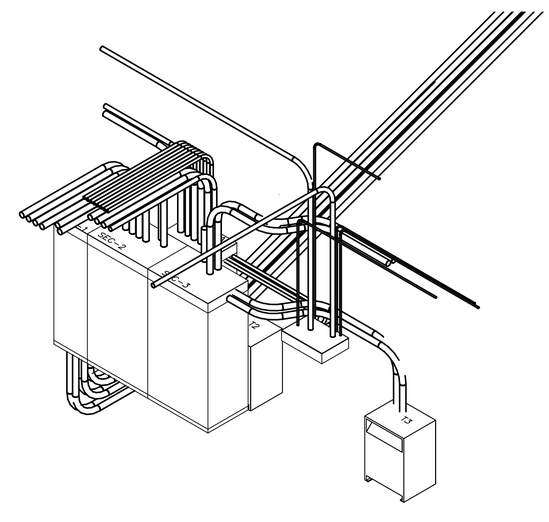

3 E1.04 NW ISO ELEVATION
SCALE: NONE

INDUSTRIAL
ENGINEERING, INC.
11451 Valley Creek Road, Suite 200
Woodbury, MN 55129
Phone (651) 436-1945
FAX (651) 436.1947
website: www.indengr.com
email: Engineering@indengr.com

COMMONWEALTH OF PENNSYLVANIA
REGISTERED PROFESSIONAL
DAVID A. EXE
ENGINEER
PE077394

February 17, 2010

ELECTRICAL SERVICE UPGRADE
1 28th Street
Pittsburgh, Pennsylvania 15222

Owner:
PACKAGING CORPORATION OF AMERICA
1 28th Street
Pittsburgh, Pennsylvania 15222

MARK	DATE	DESCRIPTION

PROJECT NO:	18802
FILENAME:	18802E1.04
DRAWN BY:	dae
CHECKED BY:	dae
COPYRIGHT:	Industrial Engineering, Inc.
DWG DATE:	February 17, 2010

SHEET TITLE
SWITCHGEAR ISOMETRIC ELEVATIONS

E1.04

2/17/2010 9:26:05 AM

CONDUIT SCHEDULE

A.	(2)	1/C	1/0	CU	CLOTH
B.	(3)	1/C	#4	--	CLOTH
C.	(2)	1/C	#2	CU	CLOTH
D.	(2)	1/C	#4/0	CU	CLOTH
E.	(3)	1/C	#3/0	AL	CLOTH
F.	(3)	1/C	#4	AL	XHHW
G.	(12)	1/C	500MCM		
(1)	1/C	250MCM			
(6)	4"C	UC			
H.	(6)	1/C	500MCM		CLOTH
I.	(18)	1/C	500MCM	CU	THW/MTW
J.	(12)	1/C	500MCM	CU	THHW
K.	(6)	1/C	350MCM	AL	XHHW
L.	(6)	1/C	750MCM	AL	
M.	(6)	1/C	500MCM	CU	THW/MTW
N.	(3)	1/C	500MCM	CU	MTW
O.	(X)	1/C	500MCM	CU	RHW
P.	(6)	1/C	500MCM		
Q.	NOT USED				
R.	(3)	1/C	500MCM	AL	XHHW
S.	(3)		#6	CU	
T.	(3)	1/C	750 MCM	AL	XHHW
U.	(3)	1/C	500MCM	CU	XHHW
V.	NOT USED				
W.	(3)	1/C	500MCM	CU	THHN/THWN
X.	(6)	1/C	500MCM	AL	XHHW

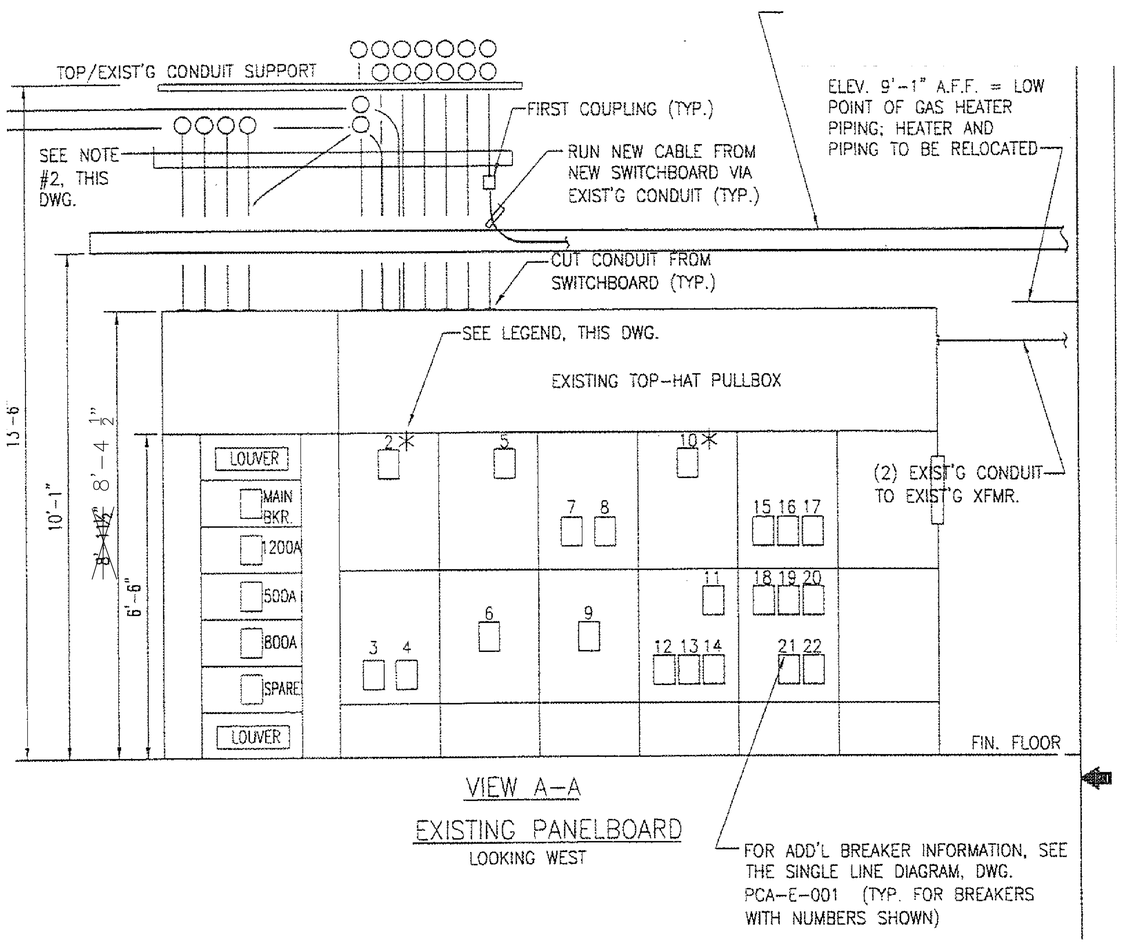

VIEW A-A

EXISTING PANELBOARD

LOOKING WEST

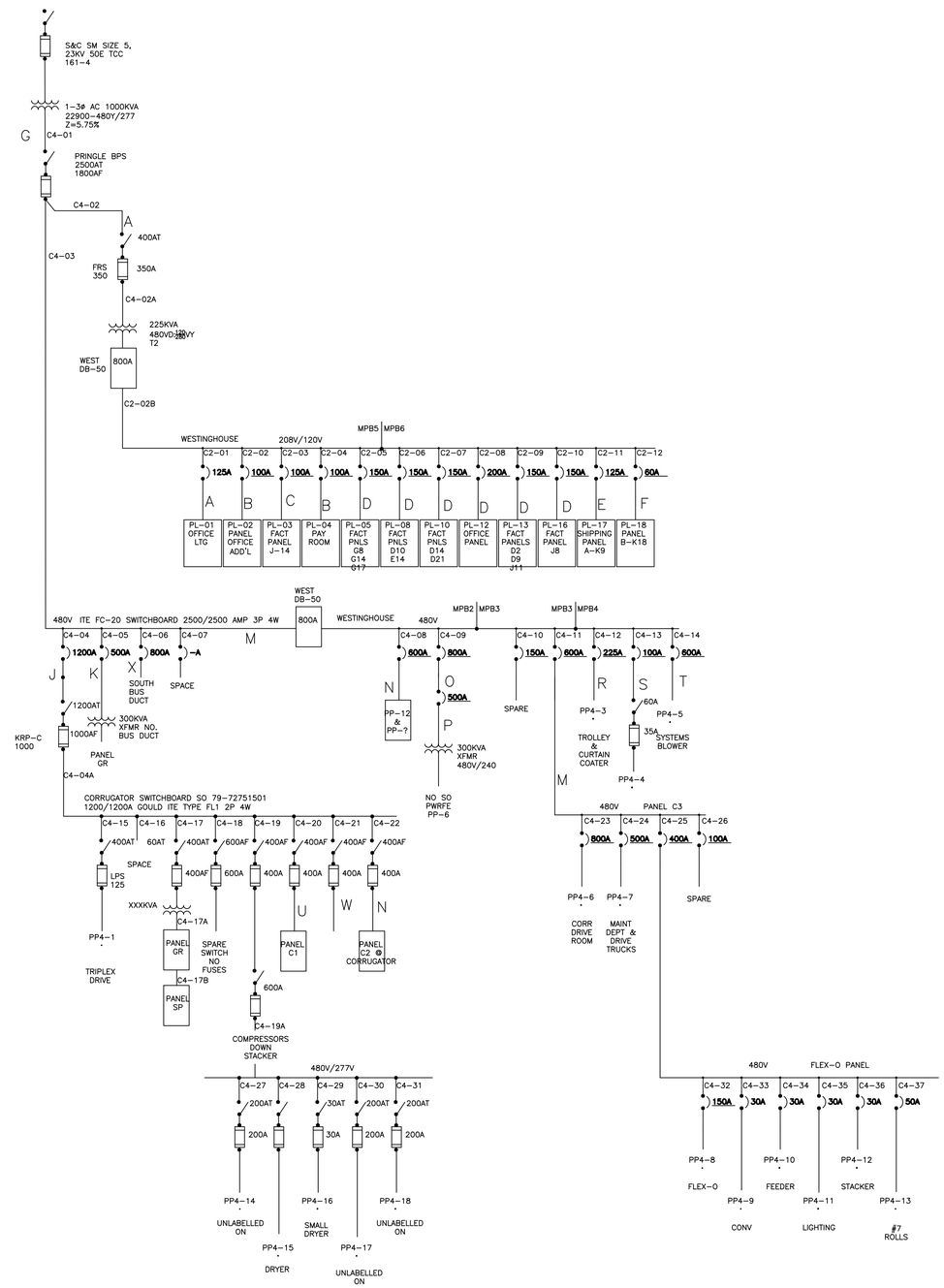

1 / E2.01 EXISTING 1-LINE DIAGRAM

SCALE:

INDUSTRIAL ENGINEERING, INC.
11451 Valley Creek Road, Suite 200
Woodbury, MN 55129
Phone (651) 436-1945
FAX (651) 436.1947
website: www.indengr.com
email: Engineering@indengr.com

COMMONWEALTH OF PENNSYLVANIA
REGISTERED PROFESSIONAL
DAVID A. EXE
ENGINEER
PE077394

February 17, 2010

ELECTRICAL SERVICE UPGRADE
1 28th Street
Pittsburgh, Pennsylvania 15222

Owner:
PACKAGING CORPORATION OF AMERICA
1 28th Street
Pittsburgh, Pennsylvania 15222

MARK	DATE	DESCRIPTION

PROJECT NO:	18802
FILENAME:	18802E2.01
DRAWN BY:	dae
CHECKED BY:	dae

COPYRIGHT: Industrial Engineering, Inc.

DWG DATE: February 17, 2010

SHEET TITLE
ELECTRICAL EXISTING 1-LINE DIAGRAM

E2.01

2/17/2010 9:26:13 AM

CONDUIT SCHEDULE

LABEL	QTY	SIZE	CONDUCTORS	QTY	MAT.	INSULATION	REMARKS
C2-01	1		1/0	2	CU	CLOTH	
C2-02	1		#4	3		CLOTH	
C2-03	1		#2	2	CU	CLOTH	
C2-04	1		#4	2	CU	CLOTH	
C2-05	1		#4/0	2	CU	CLOTH	
C2-06	1		#4/0	2	CU	CLOTH	
C2-07	1		#4/0	2	CU	CLOTH	
C2-08	1		#4/0	2	CU	CLOTH	
C2-09	1		#4/0	2	CU	CLOTH	
C2-10	1		#4/0	2	CU	CLOTH	
C2-11	1		#3/0	3	AL	CLOTH	
C2-12	1		#4	3	AL	XHHW	
C2-13							
C4-01	7	4"	500KCMIL	4	CU	THHW/THHN	NEW +#1/0 GND
C4-02	1	3 1/2"	500KCMIL	3	CU	THHN	NEW +#3 GND
C4-02A	2	3 1/2"	500KCMIL	4	CU	THHN (90°)	NEW +#3 GND
C4-03							
C4-04	4		500KCMIL	CU	THHW		
C4-05	2		350KCMIL	AL	XHHW		
C4-06	2		500KCMIL	AL	XHHW		
C4-07							
C4-08	1		500KCMIL	CU	MTW		
C4-09			500KCMIL	CU	RHW		
C4-09A	2		500KCMIL				
C4-10							
C4-11	2		500KCMIL	CU	THW/MTW		
C4-12	1		500KCMIL	AL	XHHW		
C4-13	1		#5	CU			
C4-14	1		750KCMIL	AL	XHHW		

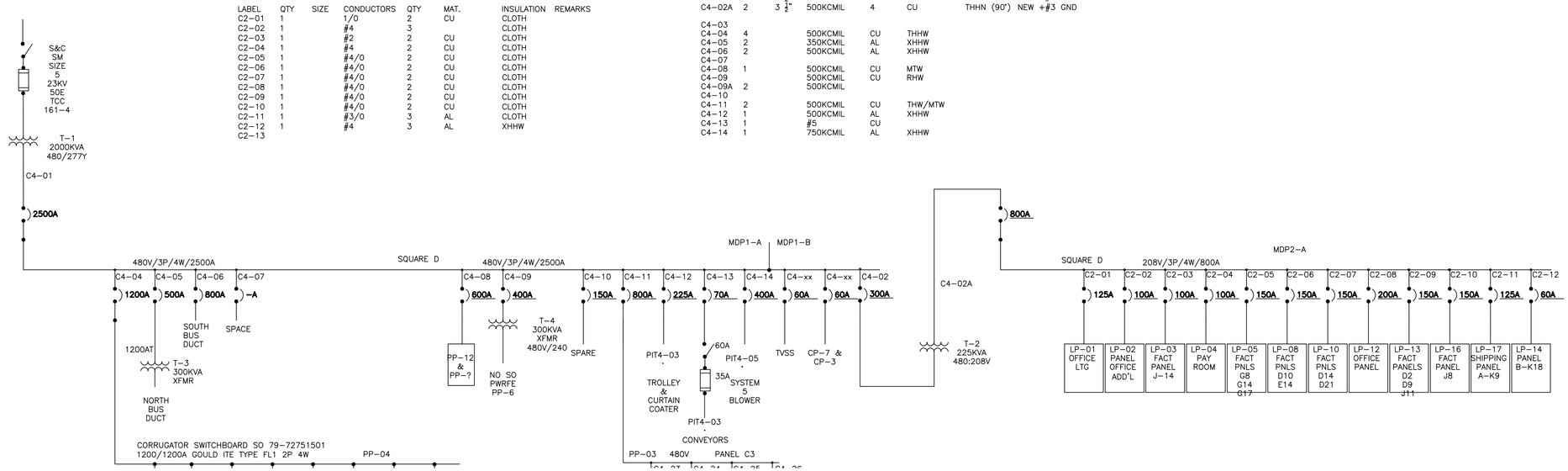

1 E2.02 PROPOSED 1-LINE DIAGRAM
SCALE:

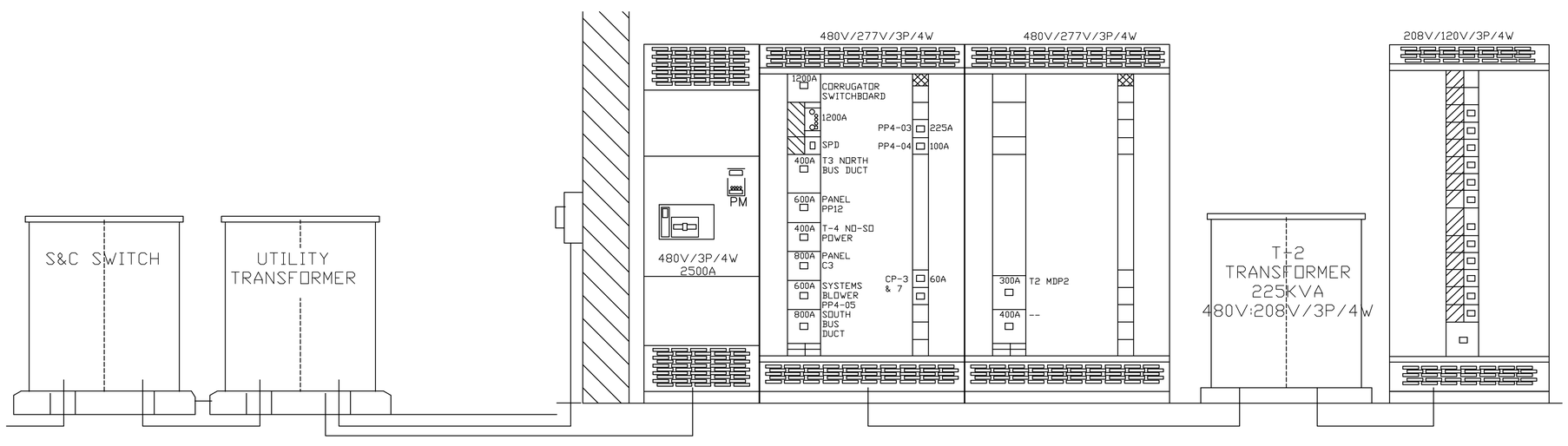

2 E2.02 PROPOSED MDP1 & MDP2 ELEVATIONS
SCALE:

INDUSTRIAL ENGINEERING, INC.
11451 Valley Creek Road, Suite 200
Woodbury, MN 55129
Phone (651) 436-1945
FAX (651) 436.1947
website: www.indengr.com
email: Engineering@indengr.com

COMMONWEALTH OF PENNSYLVANIA
REGISTERED PROFESSIONAL
DAVID A. EXE
ENGINEER
PE077394

February 17, 2010

ELECTRICAL SERVICE UPGRADE
1 28th Street
Pittsburgh, Pennsylvania 15222

Owner:
PACKAGING CORPORATION OF AMERICA
1 28th Street
Pittsburgh, Pennsylvania 15222

MARK	DATE	DESCRIPTION

PROJECT NO:	18802
FILENAME:	18802E2.02
DRAWN BY:	dae
CHECKED BY:	dae
COPYRIGHT:	Industrial Engineering, Inc.
DWG DATE:	February 17, 2010

SHEET TITLE
ELECTRICAL PROPOSED 1-LINE DIAGRAM

E2.02

2/17/2010 9:26:21 AM

DISTRIBUTION BOARD MDP1-A

230/480 VOLTS | 3 ϕ 4 W | 150 A AMP MCB | 125 A AMP BUS | 22000 A.I.C. RATING | SURFACE MOUNTED

CKT NO.	TRIP/ POLES	DESCRIPTION	DEMAND LOAD VA	WIRE SIZE
1,3,5	2500/3	PANEL MDP1-B & C	39000	<Undefined>

Load Category	Connected Load (KVA) x	Demand Factor =	Demand Load (KVA)
Motors	24.0	1.00	24.0
Motors (Largest)	12.0	1.25	15.0

TOTAL CONN. LOAD:	36.0 KVA
TOTAL DEMAND LOAD:	39.0 KVA
TOTAL DEMAND LOAD:	46.9 AMPS
SPARE CAPACITY:	78.1 AMPS

DISTRIBUTION BOARD MDP1-B

277/480 VOLTS | 3 ϕ 4 W | 2500 A AMP MLO | 360 A AMP BUS | 22000 A.I.C. RATING | SURFACE MOUNTED

CKT NO.	TRIP/ POLES	DESCRIPTION	DEMAND LOAD VA	WIRE SIZE
1,3,5	1200/3	PANEL CORRUGATOR SWITCHBOARD	39000	<Undefined>
2,4,6	500/3	PANEL NO BUS DUCT via Transformer	0	<Undefined>
7,9,11	800/3	PANEL SOUTH BUS DUCT	0	<Undefined>
8,10,12	1000/3	PANEL PP-06 NO SO PWR FEED via Transformer	0	<Undefined>
13,15,17	600/3	PANEL PP-12	0	<Undefined>
14,16,18	20/3	SPACE	0	<Undefined>
FTL	2500/3	PANEL MDP1-C	0	<Undefined>

Load Category	Connected Load (KVA) x	Demand Factor =	Demand Load (KVA)
Motors	24.0	1.00	24.0
Motors (Largest)	12.0	1.25	15.0

TOTAL CONN. LOAD:	36.0 KVA
TOTAL DEMAND LOAD:	39.0 KVA
TOTAL DEMAND LOAD:	46.9 AMPS
SPARE CAPACITY:	313.1 AMPS

DISTRIBUTION BOARD MDP1-C

277/480 VOLTS | 3 ϕ 4 W | 150 A AMP MCB | 125 A AMP BUS | 22000 A.I.C. RATING | SURFACE MOUNTED

CKT NO.	TRIP/ POLES	DESCRIPTION	DEMAND LOAD VA	WIRE SIZE
1,3,5	400/3	PANEL MDP2-A via Transformer	0	<Undefined>
2,4,6	600/3	SYSTEM BLOWER	0	<Undefined>
7,9,11	600/3	PANEL PANEL C3	0	<Undefined>
8,10,12	225/3	SPACE	0	<Undefined>

Load Category	Connected Load (KVA) x	Demand Factor =	Demand Load (KVA)

TOTAL CONN. LOAD:	0.0 KVA
TOTAL DEMAND LOAD:	0.0 KVA
TOTAL DEMAND LOAD:	0.0 AMPS
SPARE CAPACITY:	125.0 AMPS

DISTRIBUTION BOARD MDP2-A

120/208 VOLTS | 3 ϕ 4 W | 150 A AMP MCB | 125 A AMP BUS | 22000 A.I.C. RATING | SURFACE MOUNTED

CKT NO.	TRIP/ POLES	DESCRIPTION	DEMAND LOAD VA	WIRE SIZE
1,3,5	150/3	PANEL PL-01 OFFICE LTG	0	<Undefined>
2,4,6	150/3	PANEL PL-02 OFFICE ADD'L LTG	0	<Undefined>
7,9,11	150/3	PANEL PL-03 FACT. PNL J-14	0	<Undefined>
8,10,12	150/3	PANEL PL-04 PAY ROOM	0	<Undefined>
13,15,17	150/3	PANEL PL-05 PNLS G8, G14, G17	0	<Undefined>
14,16,18	150/3	PANEL PL-08 PNL D10, E14	0	<Undefined>
19,21,23	150/3	PANEL PL-10 PNLS D14, D21	0	<Undefined>
20,22,24	150/3	PANEL PL-12 OFFICE PANEL	0	<Undefined>
25,27,29	150/3	PANEL PL-13 PNLS D2, D9, J11	0	<Undefined>
26,28,30	150/3	PANEL PL-16 PNL JB	0	<Undefined>
31,33,35	150/3	PANEL PL-17 PNL A-K9	0	<Undefined>
32,34,36	150/3	PANEL PL-18 PNL B-K18	0	<Undefined>
37,39,41	20/3	SPACE	0	<Undefined>
38,40,42	20/3	SPACE	0	<Undefined>

Load Category	Connected Load (KVA) x	Demand Factor =	Demand Load (KVA)

TOTAL CONN. LOAD:	0.0 KVA
TOTAL DEMAND LOAD:	0.0 KVA
TOTAL DEMAND LOAD:	0.0 AMPS
SPARE CAPACITY:	125.0 AMPS

SWITCHBOARD CORRUGATOR SWITCHBOARD

277/480 VOLTS | 3 ϕ 4 W | 150 A AMP MCB | 125 A AMP BUS | 22000 A.I.C. RATING | SURFACE MOUNTED

CKT NO.	TRIP/ POLES	DESCRIPTION	DEMAND LOAD VA	WIRE SIZE
1,3,5	400/3	TRIPLEX DRIVE	12000	<Used in multiple drawings>
2,4,6	800/3	PANEL PANEL GR via Transformer	0	<Undefined>
7,9,11	400/3	CORRUGATOR & DOWN STACKER	12000	<Used in multiple drawings>
8,10,12	400/3	PANEL PANEL C2	0	<Undefined>
13,15,17	400/3	PANEL COMPRESSORS & DOWN STACKER	12750	<Undefined>
14,16,18	400/3	SPACE	0	<Undefined>
19,21,23	400/3	SPACE	0	<Undefined>
20,22,24	400/3	SPACE	0	<Undefined>

Load Category	Connected Load (KVA) x	Demand Factor =	Demand Load (KVA)
Motors	24.0	1.00	24.0
Motors (Largest)	12.0	1.25	15.0

TOTAL CONN. LOAD:	36.0 KVA
TOTAL DEMAND LOAD:	39.0 KVA
TOTAL DEMAND LOAD:	46.9 AMPS
SPARE CAPACITY:	78.1 AMPS

DISTRIBUTION BOARD FLEXO PANEL

230/480 VOLTS | 3 ϕ 4 W | 150 A AMP MCB | 125 A AMP BUS | 22000 A.I.C. RATING | SURFACE MOUNTED

CKT NO.	TRIP/ POLES	DESCRIPTION	DEMAND LOAD VA	WIRE SIZE
1,3,5	150/3	PP4-8 FLEX-O	3000	<Used in multiple drawings>
2,4,6	30/3	PP4-9 CONV	8000	<Used in multiple drawings>
7,9,11	30/3	PP4-10 FEEDER	3000	<Used in multiple drawings>
8,10,12	30/3	PP4-11 LIGHTING	3000	<Used in multiple drawings>
13,15,17	30/3	PP4-12 STACKER	3000	<Used in multiple drawings>
14,16,18	50/3	PP4-13 #7 ROLLS	6000	<Used in multiple drawings>
19,21,23	20/3	SPACE	0	<Undefined>
20,22,24	20/3	SPACE	0	<Undefined>

Load Category	Connected Load (KVA) x	Demand Factor =	Demand Load (KVA)
Motors	18.0	1.00	18.0
Motors (Largest)	8.0	1.25	10.0

TOTAL CONN. LOAD:	26.0 KVA
TOTAL DEMAND LOAD:	28.0 KVA
TOTAL DEMAND LOAD:	33.7 AMPS
SPARE CAPACITY:	91.3 AMPS

DISTRIBUTION BOARD COMPRESSORS & DOWN STACKER

277/480 VOLTS | 3 ϕ 4 W | 400 A AMP MCB | 320 A AMP BUS | 22000 A.I.C. RATING | SURFACE MOUNTED

CKT NO.	TRIP/ POLES	DESCRIPTION	DEMAND LOAD VA	WIRE SIZE
1,3,5	20/3	PP4-14	3000	<Used in multiple drawings>
2,4,6	20/3	PP4-15	3000	<Used in multiple drawings>
7,9,11	20/3	PP4-16	3000	<Used in multiple drawings>
8,10,12	20/3	PP4-17	3000	<Used in multiple drawings>
13,15,17	20/3	SPACE	0	<Undefined>

Load Category	Connected Load (KVA) x	Demand Factor =	Demand Load (KVA)
Motors	9.0	1.00	9.0
Motors (Largest)	3.0	1.25	3.8

TOTAL CONN. LOAD:	12.0 KVA
TOTAL DEMAND LOAD:	12.8 KVA
TOTAL DEMAND LOAD:	15.3 AMPS
SPARE CAPACITY:	304.7 AMPS

DISTRIBUTION BOARD PANEL C2

277/480 VOLTS | 3 ϕ 4 W | 400 A AMP MCB | 320 A AMP BUS | 22000 A.I.C. RATING | SURFACE MOUNTED

CKT NO.	TRIP/ POLES	DESCRIPTION	DEMAND LOAD VA	WIRE SIZE

Load Category	Connected Load (KVA) x	Demand Factor =	Demand Load (KVA)

TOTAL CONN. LOAD:	0.0 KVA
TOTAL DEMAND LOAD:	0.0 KVA
TOTAL DEMAND LOAD:	0.0 AMPS
SPARE CAPACITY:	320.0 AMPS

INDUSTRIAL ENGINEERING, INC.
11451 Valley Creek Road, Suite 200
Woodbury, MN 55129
Phone (651) 436-1945
FAX (651) 436.1947
website: www.indengr.com
email: Engineering@indengr.com

COMMONWEALTH OF PENNSYLVANIA
REGISTERED PROFESSIONAL
DAVID A. EXE
ENGINEER
PE077394

February 17, 2010

ELECTRICAL SERVICE UPGRADE
1 28th Street
Pittsburgh, Pennsylvania 15222

Owner:
PACKAGING CORPORATION OF AMERICA
1 28th Street
Pittsburgh, Pennsylvania 15222

MARK	DATE	DESCRIPTION

PROJECT NO:	18802
FILENAME:	18802E3.01
DRAWN BY:	dae
CHECKED BY:	dae
COPYRIGHT:	Industrial Engineering, Inc.
DWG DATE:	February 17, 2010

SHEET TITLE
ELECTRICAL DISTRIBUTION BD SCHEDULES

E3.01

2/17/2010 9:26:25 AM