HVAC SPECIFICATIONS

PART 1 - GENERAL

1.1 GENERAL INTENT

A. THE INTENTION OF THE CONTRACT DOCUMENTS IS TO INCLUDE ALL LABOR AND MATERIALS, AND EQUIPMENT, NECESSARY, OR REASONABLY INFERABLE AS BEING NECESSARY, FOR FURNISHING, INSTALLATION AND TESTING, COMPLETE AND READY FOR SAFE OPERATION OF SYSTEM DESCRIBED HEREIN.
B. SUBMISSION OF A PROPOSAL SHALL BE CONSTRUED AS EVIDENCE THAT THE CONTRACTOR HAS MADE A THOROUGH EXAMINATION OF THE SITE, AND ALL EXISTING CONDITIONS AND LIMITATIONS WHICH AFFECT THIS WORK LATER CLAIMS SHALL NOT BE MADE FOR LABOR, EQUIPMENT OR MATERIALS REQUIRED BECAUSE OF DIFFICULTIES ENCOUNTERED, WHICH COULD HAVE BEEN FORESEEN DURING SUCH AN EXAMINATION.
C. THE DRAWINGS INDICATE DIAGRAMMATICALLY THE EXTENT, GENERAL CHARACTER, AND LOCATION OF THE WORK TO BE PERFORMED. WHERE MINOR ADJUSTMENTS OF THE WORK ARE NECESSARY FOR PURPOSES OF FABRICATION OR INSTALLATION OF ITEMS, THE CONTRACTOR SHALL MAKE SUCH ADJUSTMENTS WITH NO ADDED COMPENSATION, WHERE SUCH ADJUSTMENTS AFFECT FUNCTIONAL OR AESTHETIC DESIGN OF THE WORK, THEY SHALL FIRST BE SUBMITTED TO THE ARCHITECT FOR REVIEW AND APPROVAL.
D. SITE UTILITIES: THE MECHANICAL DOCUMENTS INDICATE CONNECTION LOCATION OF VARIOUS BUILDING SERVICE. COORDINATE WORK WITH THE SITE UTILITIES CONTRACTOR TO ENSURE PROPER INVERT ELEVATION, PIPE SLOPE GRADIENT PIPE SIZE AND SEPARATION WITHIN TRENCH WORK. NOTIFY ARCHITECT OR ENGINEER OF ANY DISCREPANCY BETWEEN DRAWINGS AND FIELD CONDITIONS
E. COMPLY WITH ALL LOCAL AND STATE CODES REGARDING SEISMIC SUPPORT AND ISOLATION. NOT ALL SEISMIC REQUIREMENTS ARE SHOWN ON THESE DRAWINGS. CONTRACTOR SHALL MEET THE REQUIREMENTS OF THE AUTHORITY HAVING JURISDICTION SEISMIC SUPPORT/ISOLATION OF HIS WORK.

1.2 GENERAL COORDINATION

A. THE CONTRACTOR IS RESPONSIBLE FOR INSTALLATION OF A SATISFACTORY COMPLETE, AND FULLY OPERATIONAL PIECE OF WORK IN ACCORDANCE WITH TRUE INTENT OF THE DRAWINGS AND SPECIFICATIONS.
B. CONTRACTOR SHALL CONSULT ALL DRAWING FOR THE PROJECT TO DETERMINE THAT THE WORK AND EQUIPMENT WILL FIT AS PLANNED.
C. THE LOCATION OF PIPING, DUCTS, EQUIPMENT, ETC., SHALL BE CHECKED TO ENSURE CLEARANCE FROM OPENINGS, STRUCTURAL MEMBER, CABINETS, LIGHTS, OUTLETS AND EQUIPMENT HAVING FIXED LOCATIONS. THIS SHALL BE ACCOMPLISHED PRIOR TO FABRICATION OF PIPE OR DUCTS.
D. IF, AT ANY TIME, AND IN ANY CASE, CHANGES IN LOCATION OF PIPING, DUCTS, EQUIPMENT, ETC., BECOMES NECESSARY DUE TO EXISTING OBSTACLES OR INSTALLATION OF OTHER TRADES SHOWN ON ANY OF THE PROJECT DRAWINGS AND SUCH CONFLICT COULD HAVE BEEN AVOIDED BY PROPER COORDINATION BETWEEN TRADES OR PROPER PRE-PLANNING OF WORK, SUCH REQUIRED CHANGES SHALL BE MADE BY THE CONTRACTOR AT NO EXTRA COST. THESE CHANCES ARE TO BE RECORDED ON THE RECORD DRAWINGS.
E. THIS CONTRACTOR IS RESPONSIBLE TO PROVIDE ALL INCIDENTAL ELECTRICAL INTERCONNECTIONS, CONTROL WIRING ETC., WHICH ARE NECESSARY FOR SYSTEM COMPLETION AND WHICH ARE NOT SPECIFICALLY SHOWN OR OTHERWISE INDICATED ON THE ELECTRICAL DRAWINGS OR SPECIFIED IN DIVISION 26.
F. ALL ELECTRICAL WORK INCIDENTAL TO OR ACCOMPLISHED UNDER THIS DIVISION SHALL COMPLY WITH ALL REQUIREMENTS OF DIVISION 26.
G. PLANS ARE DIAGRAMMATIC IN NATURE. CONTRACTOR IS RESPONSIBLE FOR REFERRING TO THE DESIGN DOCUMENTS FOR ALL OTHER DISCIPLINES FOR PROJECT CONSTRUCTION AND OTHER DETAILS WHICH AFFECT THE MECHANICAL INSTALLATION. CONTRACTOR SHALL CONFER WITH ALL OTHER TRADES FOR FINISH ADJACENT TO ITS WORK AND ARRANGE TO HAVE VISIBLE PORTIONS OF THIS WORK (SUCH AS ACCESS DOORS, VALVES, SPRINKLER HEADS, ESCUTCHEONS, ETC.) MERGE WITH THE FINISH IN A MANNER SATISFACTORY TO THE ARCHITECT.
H. CONTRACTOR SHALL IDENTIFY ALL SERVICEABLE ITEMS (VALVES, DAMPERS, COILS, ETC.) SO THAT THE CEILING SUBCONTRACTOR MAY KNOW WHERE TO INSTALL ACCESS-TYPE PANELS SHOULD A LIFT-UP TYPE CEILING NOT BE INSTALLED. THIS CONTRACTOR SHALL PROVIDE ACCESS PANELS FOR HIS WORK UNLESS SPECIFICALLY NOTED ON THE DRAWINGS. ARCHITECT SHALL APPROVE LOCATIONS OF ACCESS PANELS PRIOR TO INSTALLATION.
I. CEILING HEIGHTS: ARCHITECTURAL DRAWINGS SHALL BE CHECKED FOR CEILING HEIGHTS, WALLS, AND CABINETS THAT ARE INTENDED TO CONCEAL WORK OF THIS SECTION. WHERE CONFLICTS OCCUR, THE ARCHITECT SHALL BE NOTIFIED PRIOR TO INSTALLATION OF THE WORK. LOCATION OF EXPOSED WORK SUCH AS LIGHTS, DIFFUSERS, SPEAKERS, SPRINKLER HEADS TAKE PRECEDENCE OVER CONCEALED WORK.
J. CONTRACTOR SHALL EXERCISE CARE TO MINIMIZE ANY DISTURBANCE TO ADJACENT AREAS OF THE BUILDING WHICH ARE TO REMAIN IN OPERATION. ISOLATE WORK AREAS BY TEMPORARY PARTITIONS, TARPS, ETC., TO KEEP DUST AND DIRT IN THE CONSTRUCTION AREA.
K. PROVED ALL NECESSARY FLASHING, SEALING, ETC., TO MAINTAIN THE WATERPROOF INTEGRITY OF THE BUILDING AS REQUIRED BY THE INSTALLATION OR REMOVAL OF ITEMS AS REQUIRED BY THIS SCOPE OF WORK.
L. INSTALL ALL WORK OF THIS SCOPE TO BE READILY ACCESSIBLE FOR OPERATION, MAINTENANCE, AND REPAIR. MINOR DEVIATIONS FROM THE DRAWINGS MAY BE MADE TO ACCOMPLISH THIS, BUT CHANGES INVOLVING OTHER TRADES MAY NOT BE MADE WITHOUT PRIOR APPROVAL.
M. ALL PENETRATIONS MADE THROUGH RATED ASSEMBLIES TO ACCOMMODATE WORK OF THIS SECTION, MUST BE SEALED TO MAINTAIN THE RATING OF SUCH ASSEMBLY BY A U.L. RECOGNIZED SEALING METHOD.
N. PROVIDE ALL CUTTING AND PATCHING REQUIRED FOR INSTALLATION OF THIS WORK. COORDINATE ALL BLOCKING, SUPPORT, ETC., NECESSARY FOR THE INSTALLATION OF THIS WORK WITH THE GENERAL CONTRACTOR.

1.3 CODES, STANDARDS, PERMITS, AND FEES

A. ALL APPLICABLE CODE LAWS AND REGULATIONS GOVERNING OR RELATING TO ANY PORTION OF THIS WORK ARE HEREBY INCORPORATED INTO AND MADE A PART OF THESE SPECIFICATIONS. THEIR PROVISIONS SHALL BE CARRIED OUT BY THE CONTRACTOR WHO SHALL INFORM THE ARCHITECT IN WRITING PRIOR TO SUBMITTING A BID, OF ANY WORK OR MATERIALS WHICH VIOLATE ANY OF THE ENFORCED LAWS, CODES, OR REGULATION. IF THE CONTRACTOR PERFORMS ANY WORK CONTRARY TO SUCH LAWS, ORDINANCES, RULES AND REGULATIONS HE SHALL ASSUME FULL RESPONSIBILITY, AND SHALL BEAR ALL COSTS ASSOCIATED WITH BRINGING WORK INTO COMPLIANCE.
B. WHERE DRAWING OR SPECIFICATIONS CALL FOR MATERIAL OR CONSTRUCTION OF A BETTER QUALITY OR HIGHER CAPACITY THAN REQUIRED BY THE ABOVE-MENTIONED CODES AND STANDARDS, THE PROVISIONS OF THE DRAWINGS OR SPECIFICATIONS SHALL TAKE PRECEDENCE OVER THE REQUIREMENTS OF THE CODES AND STANDARDS.
C. THE RESPECTIVE SUB-CONTRACTOR, AT HIS EXPENSE, SHALL OBTAIN ALL PERMITS AND FEES REQUIRED FOR THIS SCOPE OF WORK ON THIS PROJECT. THE SUB-CONTRACTORS SHALL ALSO SCHEDULE ALL REQUIRED INSPECTIONS AND OBTAIN CERTIFICATES FOR HIS WORK, AT HIS EXPENSE.
D. THE FOLLOWING SPECIFIC STANDARDS SHALL BE CONSIDERED AS MINIMUM REQUIREMENTS FOR WORK OF THIS SECTION:
   1. DUCTWORK: ALL DUCTWORK SHALL BE FABRICATED AND INSTALLED PER THE PUBLISHED STANDRADS OF THE AMERICAN SOCIETY OF HEATING, REFRIGERATION, AND AIR CONDITIONING ENGINEERS (ASHRAE) AND THE SHEET METAL AND AIR CONDITIONING NATIONAL ASSOCIATION (SMACNA), AND MEET THE REQUIREMENTS OF NFPA 90 AND NFPA 91.
   2 FILTERS: ALL FILTER MEDIA SHALL BE UL CLASS 2.
   3. FIRE DAMPERS: ALL FIRE DAMPERS SHALL BE LISTED AND INSTALLED PER UL FOR THE ASSEMBLY THEY ARE INSTALLED IN, AND MEET THE REQUIREMENTS OF THE LOCAL BUILDING CODE.

1.4 SUBMITTALS AND SUBSTITUTIONS

A. SUBMITTAL MATERIALS SHALL BE COMPLETE IN EVERY RESPECT AND SHALL CLEARLY INDICATE EQUIPMENT FEATURES, DIMENSIONS, WEIGHTS, PERFORMANCE CHARACTERISTICS, AND CAPACITIES. CAPACITY AND PERFORMANCE CALCULATIONS SHALL BE ADJUSTED TO INDICATE ACTUAL EQUIPMENT PERFORMANCE AT THE PROJECT ELEVATION. LITERATURE OR DRAWINGS THAT DESCRIBE MORE THAN ONE MODEL OR SIZE OF EQUIPMENT SHALL BE MARKED WITH ARROWS OR OTHERWISE CLEARLY INSCRIBED TO IDENTIFY THE ACTUAL EQUIPMENT THAT WILL BE FURNISHED. ALL OPTIONS AND SPECIAL PARTS OF FEATURE SHALL ALSO BE CLEARLY IDENTIFIED. ALL SUBMITTED MATERIALS MUST BE CLEAR, COMPLETE AND LEGIBLE. ALL SUBMITTALS OF THIS SCOPE MUST BE SUBMITTED AT ONE TIME; MULTIPLE AND VARIED SUBMITTALS WILL BE REJECTED.

B. SUBMITTALS FOR ALL EQUIPMENT SHALL BE ROUTED THROUGH AND REVIEWED BY THE CONTRACTOR. THE CONTRACTOR SHALL CHECK ALL SUBMITTALS FOR ADEQUATE IDENTIFICATION, CORRECTNESS, AND COMPLIANCE WITH CONTRACT DRAWINGS AND SPECIFICATIONS AND APPLY A STAMP OF APPROVAL. FOR SUBMITTALS THAT ARE REQUIRED TO BE REVIEWED BY THE ENGINEER, A DIGITAL COPY SHALL BE FORWARDED REVIEW AFTER REVIEW AND APPROVAL BY THE CONTRACTOR. THESE SHALL BE RETURNED AND SHALL BE REVISED AND RESUBMITTED UNTIL ACCEPTED BY THE ENGINEER. PROVIDE PRODUCT DATA FOR EACH PIECE OF EQUIPMENT/COMPONENT LISTED BELOW:
   1. AIR MOVING EQUIPMENT.
   2. GRILLES, REGISTERS, AND DIFFUSERS.
   3. EXHAUST HOODS.
   4. WHERE SEISMIC SUPPORT IS REQUIRED BY CODES, PROVIDE SHOP DRAWINGS AND SUPPORTING CALCULATIONS IN ACCORDANCE WITH THE ASCE 7 CHAPTER 13. CALCULATIONS AND SHOP DRAWINGS SHALL BE SIGNED AND SEALED BY A LICENSED ENGINEER IN THE STATE IN WHICH THE PROJECT SITE OCCURS.

C. APPROVED MANUFACTURERS, WHICH MAY SUBMIT EQUAL PRODUCT TO THOSE SPECIFIED, ARE LISTED IN THE EQUIPMENT SCHEDULES. ANY SUBMITTAL FOR CONSIDERATION AS AN EQUAL TO THAT SCHEDULED MUST CONTAIN ALL INFORMATION REQUIRED TO EVALUATE THIS CLAIM. MANUFACTURERS NOT LISTED AS EQUAL MUST SUBMIT IN WRITING FOR REVIEW FIVE DAYS PRIOR TO BID CLOSING. CONTRACTOR IS RESPONSIBLE TO ASSURE ANY SUBSTITUTED ITEM MEETS ALL PHYSICAL AND PERFORMANCE REQUIREMENTS AS INTENDED IN THE DESIGN DOCUMENTS.

D. APPROVAL SUBMITTALS BY THE ENGINEER SHALL NOT RELIEVE THE CONTRACTOR FROM RESPONSIBILITY FOR DEVIATIONS FROM DRAWINGS OR SPECIFICATIONS, NOR SHALL IT RELIEVE HIM FROM RESPONSIBILITY FOR ERRORS IN SHOP DRAWINGS OR OTHER SUBMITTAL LITERATURE.

E. CONTRACTOR HAS SOLE RESPONSIBILITY TO COORDINATE ANY SUBSTITUTIONS WITH ALL OTHER DISCIPLINES. EQUIPMENT OF GREATER POWER, DIMENSIONS, CAPACITIES, AND RATINGS MAY BE FURNISHED PROVIDED SUCH PROPOSED EQUIPMENT IS APPROVED IN WRITING AND CONNECTING MECHANICAL AND ELECTRICAL SERVICES, CIRCUIT BREAKERS, CONDUIT, MOTORS, BASES, AND EQUIPMENT SPACES ARE INCREASED. NO ADDITIONAL COSTS WILL BE ACCEPTED FOR THESE INCREASED. NO ADDITIONAL COSTS WILL BE ACCEPTED FOR THESE INCREASES, IF LARGER EQUIPMENT IS PROVIDED. IF MINIMUM ENERGY RATINGS OR EFFICIENCIES OF THE EQUIPMENT ARE SPECIFIED. THE EQUIPMENT MUST MEET THE DESIGN REQUIREMENTS AND COMMISSIONING REQUIREMENTS. DESIGN OF ELECTRICAL REQUIREMENTS IS BASED ON MECHANICAL EQUIPMENT SPECIFIED. MECHANICAL SHALL COORDINATE WITH ELECTRICAL CONTRACTOR IF EQUIPMENT PURCHASED IS DIFFERENT FROM THAT SPECIFIED STILL MEETS DESIGN INTENT, INCLUDING BUT NOT LIMITED TO OVERCURRENT PROTECTION, LOCAL DISCONNECTION MEANS, WIRE SIZING, AND DESIGN COSTS.

1.5 DELIVERY, STORAGE AND HANDLING

A. DELIVER PRODUCTS TO THE PROJECT PROPERLY IDENTIFIED WITH NAMES, MODEL NUMBERS, TYPES, GRADES, COMPLIANCE LABELS, AND OTHER INFORMATION NEEDED FOR IDENTIFICATION.
B. ALL MECHANICAL EQUIPMENT AND MATERIAL ITEMS SHALL BE PROTECTED FROM WEATHER AND VANDALISM PRIOR TO ACTUAL INSTALLATION. FAN WHEELS, PUMPS AND OTHER ROTATING MACHINERY SHALL BE PERIODICALLY ROTATED DURING STORAGE. ANY FACTORY PAINTED EQUIPMENT SCRATCHED OR MARRED DURING SHIPMENT OR CONSTRUCTION SHALL BE RESTORED TO ORIGINAL. "NEW" CONDITION. THIS INCLUDES COMPLETE REPAINTING OF THE EQUIPMENT IF NECESSARY TO PROVIDE EXACT PAINT MATCH.
C. CONTRACTOR IS RESPONSIBLE FOR RECEIVING AND OFFLOADING EQUIPMENT OF HIS SCOPE. IMMEDIATELY UPON RECEIPT, CONTRACTOR SHALL INSPECT ALL EQUIPMENT AND MATERIAL FOR SHIPPING DAMAGE AND REPLACE ANY DEFECTIVE ITEMS AT NO INCREASE TO CONTRACT AMOUNT.

1.6 SEQUENCING AND SCHEDULING

A. COORDINATE MECHANICAL EQUIPMENT INSTALLATION WITH OTHER BUILDING COMPONENTS PRIOR TO ORDERING OR FABRICATION OF ADJOINING WORK.
B. COORDINATE THE INSTALLATION OF REQUIRED SUPPORTING DEVICES AND SET SLEEVES IN POURED-IN-PLACE CONCRETE AND OTHER STRUCTURAL COMPONENTS AS THEY ARE CONSTRUCTED. ARRANGE FOR CHASES, SLOTS, AND OPENINGS IN BUILDING STRUCTURE DURING PROGRESS OF CONSTRUCTION TO ALLOW FOR MECHANICAL INSTALLATIONS.
C. SEQUENCE, COORDINATE AND INTEGRATE INSTALLATIONS OF MECHANICAL MATERIALS AND EQUIPMENT FOR EFFICIENT FLOW OF WORK. COORDINATE INSTALLATION OF LARGE EQUIPMENT REQUIRING POSITIONING PRIOR TO CLOSING IN THE BUILDING.
D. COORDINATION CONNECTION OF MECHANICAL SYSTEMS WITH EXTERIOR UNDERGROUND AND OVERHEAD UTILITIES AND SERVICES. COMPLY WITH REQUIREMENTS OF GOVERNING REGULATIONS, FRANCHISED SERVICE COMPANIES, AND CONTROLLING AGENCIES. COORDINATE CONNECTION OF ELECTRICAL SERVICES.
E. PROVIDE IDENTIFICATION OF ALL EQUIPMENT. COORDINATE INSTALLATION OF IDENTIFYING DEVICES AFTER COMPLETING COVERING AND PAINTING WHERE DEVICES ARE APPLIED TO SURFACES. INSTALL IDENTIFYING DEVICES PRIOR TO INSTALLING ACOUSTICAL CEILINGS AND SIMILAR CONCEALMENT.

1.7 PROJECT CLOSE-OUT

A. CONTRACTOR SHALL FURNISH A WRITTEN GUARANTEE TO REPLACE OR REPAIR ANY DEFECTS IN WORKMAN SHIP OR EQUIPMENT, WHICH DEVELOP WITHIN ONE YEAR FROM ACCEPTANCE BY THE OWNER.
B. CONTRACTOR SHALL MAINTAIN A REDLINE SET OF CONSTRUCTION DRAWINGS SHOWING DEVIATION BETWEEN THE DRAWINGS AND INSTALLED CONDITIONS. THESE SHALL BE PROVIDED OVER TO THE OWNER AT ACCEPTANCE OF THE WORK.
C. PROVIDE THREE (3) COMPLETE SETS OF OPERATION AND MAINTENANCE MANUALS. THESE ARE TO INCLUDE ALL EQUIPMENT CUT-SHEETS, MANUFACTURER RECOMMEND MAINTENANCE PROCEDURES, MANUFACTURERS WARRANTEE INFORMATION, AND CONTRACTORS WARRANTEE LETTER AND CONTACT INFORMATION.
D. PROVIDE THREE (3) REVIEWED BALANCE REPORTS OF WATER AND AIR SYSTEMS AS APPLICABLE.
E. CONTRACTOR SHALL INSTRUCT THE OWNER ON THE OPERATION AND MAINTENANCE OF ALL SYSTEMS PROVIDE UNDER THIS CONTRACT.

PART 2 - PRODUCTS

2.1 GENERAL

A. DUCT DIMENSIONS SHOWN ON PLANS ARE NET FREE AREA.
B. ROUND ELBOWS MUST HAVE A CENTERLINE RADIUS OF NO LESS THAN 1.5 TIMES THE DIAMETER OF THE ELBOW. SQUARE ELBOWS SHALL HAVE TURNING VANES.
C. ALL DUCTWORK EXPOSED TO VIEW SHALL BE ROUND OR OVAL SPIRAL.

2.2 DUCTWORK MATERIALS

A. COMPLY WITH SMACNA'S "HVAC DUCT CONSTRUCTION STANDARDS--METAL AND FLEXIBLE" FOR ACCEPTABLE MATERIALS, MATERIAL THICKNESS, AND DUCT CONSTRUCTIONS METHODS, UNLESS OTHERWISE INDICATED. SHEET METAL MATERIALS SHALL BE FREE OF PITTING, SEAM MARKS, ROLLER MARKS, STAINS, DISCOLORATIONS, AND OTHER IMPERFECTIONS. UNLESS STATED OTHERWISE, ALL DUCTWORK TO BE 26 GAUGE MINIMUM.
B. GALVANIZED SHEET STEEL: LOCK-FORMING QUALITY; COMPLYING WITH ASTM A 653/A 653M AND HAVING G90 (Z275) COATING DESIGNATION; DUCTS SHALL HAVE MILL-PHOSPHATIZED FINISH FOR SURFACES EXPOSED TO VIEW.
C. CARBON-STEEL SHEETS: ASTM A 366/A 366M, COLD-ROLLED SHEETS; COMMERCIAL QUALITY; WITH OILED MATTE FINISH FOR EXPOSED DUCTS.
D. STAINLESS STEEL: ASTM A 480/A 480M, TYPE 316 OR 304, AND HAVING A NO. 2D FINISH FOR CONCEALED DUCTS AND SUITABLE FINISH FOR EXPOSED DUCTS.

2.3 INSULATION AND LINER

A. GENERAL:
   1. FIRE- HAZARD CLASSIFICATION: MAXIMUM FLAME-SPREAD INDEX OF 25 AND SMOKE-DEVELOPED INDEX OF 50 WHEN TESTED ACCORDING TO ASTM E 84.
   2. INSULATION SCHEDULE:
      a. OUTSIDE THE BUILDING THERMAL ENVELOPE
         1) INSULATE ALL SUPPLY AND RETURN DUCTS TO R-8
      b. INSIDE THE BUILDING THERMAL ENVELOPE
         1) INSULATE SUPPLY AIR DUCTS TO R-6.
         2) INSULATE RETURN AIR DUCTS TO R-6.
         3) INSULATE OUTSIDE AIR DUCTS TO R-8 WITH CLOSED CELL INSULATION TO PREVENT CONDENSATION.
B. DUCT INSULATION: MINERAL OR GLASS FIBERS BONDED WITH A THERMOSETTING RESIN. COMPLY WITH ASTM C 553, TYPE II AND ASTM C 1290, TYPE III WITH FACTORY-APPLIED FSK JACKET.
C. FIBROUS-GLASS LINER: COMPLY WITH NFPA 90A OR NFPA 90B AND WITH NAIMA AH124.
   1. MATERIALS: ASTM C 1071; SURFACES EXPOSED TO AIRSTREAM SHALL BE COATED TO PREVENT EROSION OF GLASS FIBERS.
      a. THICKNESS: 1"
      b. LINER ADHESIVE: COMPLY WITH NFPA 90A OR NFPA 90B AND WITH ASTM C 916.
      C. MECHANICAL FASTENERS: GALVANIZED STEEL SUITABLE FOR ADHESIVE ATTACHMENT, MECHANICAL ATTACHMENT, OR WELDING ATTACHMENT TO DUCT WITHOUT DAMAGING LINER WHEN APPLIED AS RECOMMENDED BY MANUFACTURER AND WITHOUT CAUSING LEAKAGE IN DUCT.
D. FIRE-RATED INSULATION SYSTEM: HIGH-TEMPERATURE, FLEXIBLE, BLANKET INSULATION WITH FSK JACKET THAT IS UL TESTED AND CERTIFIED TO PROVIDE REQUIRED FIRE RATING.
E. REFRIGERANT PIPING INSULATION: SUCTION PIPING - FLEXIBLE ELASTOMERIC, 1" THICK.

2.4 DUCT ACCESSORIES

A. STANDARD VOLUME DAMPERS: SINGLE OR OPPOSED-BLADE DESIGN, STANDARD LEAKAGE RATING, AND SUITABLE FOR HORIZONTAL OR VERTICAL APPLICATIONS. SHAFTS TO BE FULL LENGTH, GALVANIZED STEEL, WITH ZINC-PLATED, DIE-CAST CORE WITH DIAL AND HANDLE MADE OF 3/32-INCH- THICK ZINC-PLATED STEEL, AND A 3/4-INCH HEXAGON LOCKING NUT. INCLUDE CENTER HOLE TO SUIT DAMPER OPERATING-ROD SIZE. INCLUDING ELEVATED PLATFORM FOR INSULATED DUCT MOUNTING.
B. FIRE DAMPERS: CURTAIN TYPE; FIRE DAMPERS SHALL BE LABELED ACCORDING TO UL 555.
   1. FRAME: FABRICATED WITH ROLL-FORMED, 0.034-INCH- THICK GALVANIZED STEEL; WITH MITERED AND INTERLOCKING CORNERS.
   2. BLADES: ROLL-FORMED, INTERLOCKING, 0.034-INCH- THICK, GALVANIZED SHEET STEEL. IN PLACE OF INTERLOCKING BLADES, USE FULL-LENGTH, 0.034-INCH- THICK, GALVANIZED-STEEL BLADE CONNECTORS.
   3. FUSIBLE LINK: REPLACEABLE, 165 DEGREE F RATED.
C. CEILING FIRE DAMPERS: LABELED ACCORDING TO UL 555C; COMPLY WITH CONSTRUCTION DETAILS FOR TESTED FLOOR- AND ROOF-CEILING ASSEMBLIES AS INDICATED IN UL'S "FIRE RESISTANCE DIRECTORY."
   1. FRAME: GALVANIZED SHEET STEEL, ROUND OR RECTANGULAR, STYLE TO SUIT CEILING CONSTRUCTION.
   2. BLADES: GALVANIZED SHEET STEEL WITH REFRACTORY INSULATION.
   3. FUSIBLE LINK: REPLACEABLE, 165 DEGREE F RATED.
D. COMBINATION FIRE/SMOKE DAMPERS: LABELED ACCORDING TO UL 555S. COMBINATION FIRE AND SMOKE DAMPERS SHALL BE LABELED ACCORDING TO UL 555 FOR 1-1/2-HOUR RATING.
   1. FRAME AND BLADES: 0.064-INCH THICK, GALVANIZED SHEET STEEL.
   2. MOUNTING SLEEVE: FACTORY-INSTALLED, 0.052-INCH THICK, GALVANIZED SHEET STEEL; LENGTH TO SUIT WALL OR FLOOR APPLICATION.
   3. FUSIBLE LINK: REPLACEABLE, 165 DEGREE F RATED.
   4. DAMPER MOTORS: MODULATING AND TWO-POSITION ACTION. EQUIP WITH AN INTEGRAL SPIRAL-SPRING MECHANISM WHERE INDICATED. ENCLOSE ENTIRE SPRING MECHANISM IN A
   5. ELECTRICAL CONNECTION: 115 V, SINGLE PHASE, 60 HZ.
   6. SMOKE DETECTOR AND FIRE ALARM CONTRACTOR.
A. FLEXIBLE CONNECTORS: FLAME-RETARDANT OR NONCOMBUSTIBLE FABRICS, COATINGS, AND ADHESIVES COMPLYING WITH UL 181, CLASS 1. PROVIDE HEAVY METAL EDGE BANDS, SEALED TO PREVENT LEAKAGE.
   1. INDOOR SYSTEM, FLEXIBLE CONNECTOR FABRIC: GLASS FABRIC DOUBLE COATED WITH NEOPRENE.
   2. OUTDOOR SYSTEM, FLEXIBLE CONNECTOR FABRIC: GLASS FABRIC DOUBLE COATED WITH WEATHERPROOF, SYNTHETIC RUBBER RESISTANT TO UV RAYS AND OZONE.
F. FLEXIBLE DUCTS: UL 181, CLASS 1, UL 181, CLASS 1, BLACK POLYMER FILM SUPPOSED BY HELICALLY WOUND, SPRING-STEEL WIRE; 1-1/2" FABROUS-GLASS INSULATION; POLYETHYLENE VAPOR BARRIER FILM. FLEX DUCT SHALL BE EQUAL TO CETAINTEED "CERTAFLEX" G25.

2.5 ACCESS DOORS AND PANELS

A. DUCT MOUNTED ACCESS DOORS: DOUBLE WALL, DUCT MOUNTING AND RECTANGULAR; FABRICATED OF GALVANIZED SHEET METAL WITH INSULATION FILL AND THICKNESS AS INDICATED FOR DUCT PRESSURE CLASS.
   1. FRAME: GALVANIZED SHEET STEEL, WITH BEND-OVER TABS AND FOAM GASKETS.
   2. PROVIDE NUMBER OF HINGES AND LOCKS AS FOLLOWS:
      a. LESS THAN 12 INCHES SQUARE: SECURE WITH TWO SASH LOCKS.
      b. UP TO 18 INCHES SQUARE: TWO HINGES AND TWO SASH LOCKS.
      C. UP TO 24 BY 48 INCHES: THERE HINGES AND TWO COMPRESSION LATCHES.

2.6 EQUIPMENT CURBS AND SUPPORT

A. ROOF MOUNTED EQUIPMENT: PROVIDE FACTORY CURB TO MATCH EQUIPMENT PROVIDED. CURB TO MATCH ROOF SLOPE, TYPE, AND INSULATION DEPTHS FOR PROPER EQUIPMENT MOUNTING (ACCOUNT FOR APPLICABLE ACCESSORIES SUCH AS ECONOMIZERS AND ERVS).
B. GROUND/FLOOR MOUNTED EQUIPMENT: PROVIDE CONCRETE HOUSE-KEEPING PAD AT LEAST 4" THICK AND AT LEAST 6" LARGER THAN THE EQUIPMENT BEING SUPPORTED.

PART 3 - EXECUTION

3.1 EXAMINATION

A. VERIFY FINAL LOCATIONS FOR ROUGH-INS WITH FIELD MEASUREMENTS AND WITH THE REQUIREMENTS OF THE ACTUAL EQUIPMENT TO BE CONNECTED.
B. LOCATION OF EQUIPMENT AND DEVICES, AS SHOWN ON THE DRAWINGS, ARE APPROXIMATE UNLESS DIMENSIONED; DO NOT SCALE DRAWINGS. EXACT LOCATIONS OF SUCH ITEMS SHALL BE DETERMINED BY THE ARCHITECT'S REPRESENTATIVE AND/OR DETERMINED FROM SPECIAL DETAIL AND DRAWINGS. VERIFY THE PHYSICAL DIMENSIONS OF EACH ITEM OF MECHANICAL EQUIPMENT TO FIT THE AVAILABLE SPACE AND PROMPTLY NOTIFY THE ARCHITECT PRIOR TO ROUGHING-IN IF CONFLICTS APPEAR. COORDINATION OF DIVISION 15 EQUIPMENT AND SYSTEMS TO THE AVAILABLE WIRING, EQUIPMENT, DUCTWORK, PIPING, ETC. SHALL BE THE RESPONSIBILITY OF THE CONTRACTOR. THE INSTALLATION SHALL BE CONCEALED WITHIN BUILDING CONSTRUCTION, OR EXPOSED IN MECHANICAL ROOMS, UNLESS OTHERWISE NOTED.

3.2 GENERAL INSTALLATION

A. PROVIDE ALL VALVES, DAMPERS AND CONTROL DEVICES REQUIRED TO COMPLETE BALANCING OF SYSTEMS AS DESCRIBED IN THESE DOCUMENTS OR AS NORMALLY ASSOCIATED WITH THE SYSTEMS TO BE INSTALLED WHETHER SPECIFICALLY CALLED FOR ON THE DRAWINGS, DETAILS OR SPECIFICATIONS OR NOT. IT SHALL BE UNDERSTOOD, UNLESS SPECIFICALLY STATED OTHERWISE, THAT ALL SYSTEMS INSTALLED SHALL COMPLY WITH INDUSTRY RECOGNIZED STANDARDS AND FEATURES.
B. COORDINATE MECHANICAL SYSTEMS, EQUIPMENT, AND MATERIALS INSTALLATION WITH OTHER BUILDING COMPONENTS. SEQUENCE, COORDINATE, AND INTEGRATE INSTALLATIONS OF MECHANICAL MATERIALS AND EQUIPMENT FOR EFFICIENT FLOW OF THE WORK. GIVE PARTICULAR ATTENTION TO LARGE EQUIPMENT REQUIRING POSITIONING PRIOR TO CLOSING IN THE BUILDING. GIVE RIGHT-OF-WAY PRIORITY TO SYSTEMS REQUIRED TO BE INSTALLED AT A SPECIFIED SLOPE.
C. WHERE MOUNTING HEIGHTS ARE NOT DETAILED OR DIMENSIONED, INSTALL SYSTEMS, MATERIALS, AND EQUIPMENT TO PROVIDE THE MAXIMUM HEADROOM POSSIBLE.
D. INSTALL SYSTEMS, MATERIALS, AND EQUIPMENT LEVEL AND PLUMB, PARALLEL AND PERPENDICULAR TO OTHER BUILDING SYSTEMS AND COMPONENTS, WHERE INSTALLED EXPOSED IN FINISHED SPACES.
E. INSTALL MECHANICAL EQUIPMENT TO FACILITATE SERVICING, MAINTENANCE, AND REPAIR OR REPLACEMENT OF EQUIPMENT COMPONENTS. AS MUCH AS PRACTICAL, CONNECT EQUIPMENT FOR EASE OF DISCONNECTING, WITH MINIMUM OF INTERFERENCE WITH OTHER INSTALLATIONS. EXTEND GREASE FITTINGS TO AN ACCESSIBLE LOCATION.
F. DRAWINGS ARE NOT DETAILED TO THE EXTENT THAT ALL DUCTWORK AND PIPING OFFSETS, BENDS, AND SPECIAL FITTINGS ARE SHOWN AND EXACT LOCATION INDICATED; HOWEVER, THEY ARE TO BE PROVIDED WHETHER SHOWN OR NOT. REFER TO SCHEDULES FOR ACCESSORIES.
G. THE CONTRACTOR SHALL BE RESPONSIBLE FOR PROPERLY PROTECTING ANY PENETRATION OF A FIRE RATED ASSEMBLY. FIRE SEAL, CAULKING, AND APPURTENANCES SHALL BE UL LISTED FOR THE ASSEMBLY RATING IT IS APPLIED TO AND SHALL BE INSTALLED PER THE MANUFACTURERS WRITTEN INSTRUCTIONS. ALL SUCH MATERIALS SHALL MEET STATE, LOCAL, AND AUTHORITIES CODES AND STANDARDS.
H. PENETRATIONS ARE PROHIBITED IN ANY STRUCTURAL MEMBERS (EXCEPT WHERE NOTED IN DRAWING) WITHOUT THE WRITTEN CONSENT OF THE ARCHITECT. OBTAIN APPROVAL FOR OTHER FRAMED OPENINGS WHICH MAY BE REQUIRED IN ADDITION TO THOSE SHOWN ON DRAWINGS. PAY ALL COSTS FOR ADDITIONAL CUTTING OF HOLES AS THE RESULT OF INCORRECT LOCATION OF SLEEVES OR FURNISHING INCORRECT INFORMATION AS TO THE REQUIREMENTS OF FRAMED OPENINGS.
I. FIRE-RATED ASSEMBLY PENETRATIONS:
   1. THE CONTRACTOR SHALL BE RESPONSIBLE FOR PROPERLY PROTECTING ANY PENETRATION OF A FIRE RATED ASSEMBLY. FIRE SEAL, CAULKING, AND APPURTENANCES SHALL BE UL LISTED FOR THE ASSEMBLY RATING IT IS APPLIED TO AND SHALL BE INSTALLED PER THE MANUFACTURERS WRITTEN INSTRUCTIONS. ALL SUCH MATERIALS SHALL MEET STATE, LOCAL, AND AUTHORITIES CODES AND STANDARDS.
   2. REFER TO ARCHITECTURAL DRAWINGS FOR ALL FIRE RATED ASSEMBLY LOCATIONS AND RATINGS.
J. SEISMIC RESTRAINT:
   1. THE CONTRACTOR SHALL PROVIDE PROPER MECHANICAL SEISMIC RESTRAINTS FOR ALL INSTALLED ITEMS INCLUDING, BUT NOT LIMITED TO, DUCTS, PIPING, EQUIPMENTS AND ACCESSORIES. THE CONTRACTOR SHALL PROVIDE SEISMIC RESTRAINTS AS LISTED BY THE CODES USED BY THE AHJ OR AS SHOWN ON THE DRAWINGS (WHICHEVER IS MORE STRINGENT).

3.3 DUCT INSTALLATION

A. CONSTRUCT AND INSTALL DUCTS ACCORDING TO SMACNA'S "HVAC DUCT CONSTRUCTION STANDARDS--METAL AND FLEXIBLE."
B. INSTALL DUCTS WITH FEWEST POSSIBLE JOINTS. INSTALL FABRICATED FITTINGS FOR CHANGES IN DIRECTIONS, SIZE, AND SHAPE AND FOR CONNECTIONS.
C. COORDINATE LAYOUT WITH SUSPENDED CEILING, FIRE- AND SMOKE-CONTROL DAMPERS, LIGHTING LAYOUTS, AND SIMILAR FINISHED WORK.
D. SEAL ALL JOINTS WITH UNITED DUCT SEALANT. APPLY SEALANT TO MALE END CONNECTORS BEFORE INSERTION, AND AFTERWARD TO COVER ENTIRE JOINT AND SHEET METAL SCREWS.
E. NON-FIRE-RATED PARTITION PENETRATION: WHERE DUCTS PASS THROUGH INTERIOR PARTITIONS AND EXTERIOR WALLS AND ARE EXPOSED TO VIEW, CONCEAL SPACES BETWEEN CONSTRUCTION OPENINGS AND DUCTS OR DUCT INSULATION WITH SHEET METAL FLANGES OF SAME METAL THICKNESS AS DUCTS. OVERLAP OPENINGS ON 4 SIDES BY AT LEAST 1-1/2 INCHES.
F. FIRE-RATED PARTITION PENETRATIONS: WHERE DUCTS PASS THROUGH INTERIOR PARTITIONS AND EXTERIOR WALLS, INSTALL APPROPRIATELY RATED FIRE DAMPERS, SLEEVES AND FIRE STOPPING SEALANT.
G. PAINT INTERIORS OF METAL DUCTS, THAT DO NOT HAVE DUCT LINER, FOR 24 INCHES UPSTREAM OF REGISTERS AND GRILLS. APPLY ONE OF FLAT, BLACK, LATEX FINISH COAT OVER A COMPATIBLE GALVANIZED-STEEL PRIMER.
H. PROVIDE BALANCING DAMPERS AT POINT ON SUPPLY, RETURN, AND EXHAUST SYSTEM WHERE BRANCHES LEAD FROM LARGER DUCTS AS REQUIRED FOR AIR BALANCING. INSTALL AT A MINIMUM OF TWO DUCT WIDTHS FROM BRANCH TAKEOFF.
I. INSTALL FLEXIBLE CONNECTORS IMMEDIATELY ADJACENT TO EQUIPMENT IN DUCTS ASSOCIATED WITH FANS AND MOTORIZED EQUIPMENT SUPPORTED BY VIBRATION ISOLATORS.
J. CONNECT DIFFUSERS GRILLS TO LOW PRESSURE DUCTS WITH MAXIMUM 72-INCH LENGTH OF FLEXIBLE DUCT CLAMPED OR STRAPPED IN PLACE. CONNECT FLEXIBLE DUCTS TO METAL DUCTS WITH PANDUIT STRAPS.
K. INSTALL BACKDRAFT DAMPERS ON EXHAUST FANS OR EXHAUST DUCTS NEAREST TO OUTSIDE AND WHERE INDICATED.
L. TYPE I HOOD EXHAUST DUCTS: COMPLY WITH NFPA 96.
   1. CONCEALED: CARBON-STEEL SHEET.
   2. EXPOSED:TYPE 304, STAINLESS STEEL WITH FINISH TO MATCH KITCHEN EQUIPMENT AND RANGE HOOD.
   3. WELD SEAMS AND JOINTS.
   4. PROVIDE RATED ACCESS DOORS FOR CLEANING AS REQUIRED BY CODE.
   5. INSTALL DUCTS TO ALLOW FOR THERMAL EXPANSION THROUGH 2000 DEG F (1110 DEG C) TEMPERATURE RANGE.
M. DISHWASHER HOOD EXHAUST DUCTS:
   1. TYPE 304, STAINLESS STEEL WITH FINISH TO MATCH KITCHEN EQUIPMENT AND RANGE HOOD.
   2. WELD SEAMS AND JOINTS.

3.4 HANGING AND SUPPORTING

A. SUPPORT HORIZONTAL DUCTS WITHIN 24 INCHES OF EACH ELBOW AND WITHIN 48 INCHES OF EACH BRANCH INTERSECTION.
B. SUPPORT VERTICAL DUCTS AT MAXIMUM INTERVALS OF 16 FEET AND AT EACH FLOOR.
C. SUPPORT ALL DUCTWORK, PIPING, AND EQUIPMENT AS REQUIRED BY THE LOCAL CODES, MANUFACTURES RECOMMENDATIONS, AND STANDARD INDUSTRY PRACTICE.
D. USE MATERIALS COMPATIBLE WITH ITEMS BEING SUPPORTED TO AVOID ELECTROLYTIC ACTION, AND CONFORM TO SMACNA, ANSI/ASME B31, NFPA, MSS SP-58, 69, 89.

3.5 ACCESS DOORS AND PANELS

A. DUCT ACCESS DOORS: INSTALL DUCT ACCESS DOORS TO ALLOW FOR INSPECTING, ADJUSTING, AND MAINTAINING ACCESSORIES AND TERMINAL UNITS AS FOLLOWS:
   1. ADJACENT TO FIRE OR SMOKE DAMPERS, PROVIDING ACCESS TO RESET OR REINSTALL FUSIBLE LINKS.
B. ARCHITECTURAL ACCESS DOORS OR PANELS: COORDINATE REQUIREMENTS FOR ACCESS PANELS AND DOORS WHERE MECHANICAL ITEMS REQUIRING ACCESS ARE CONCEALED BEHIND FINISHED SURFACES.

3.6 TESTING AND BALANCING

A. PERFORM TESTING AND BALANCING PROCEDURES ON EACH SYSTEM ACCORDING TO THE PROCEDURES CONTAINED IN NEBB'S "PROCEDURAL STANDARDS FOR TESTING, ADJUSTING, AND BALANCING OF ENVIRONMENTAL SYSTEMS" OR SMACNA'S "HVAC SYSTEM - TESTING, ADJUSTING, AND BALANCING".
B. PREPARE TEST REPORTS FOR BOTH FANS AND OUTLETS. OBTAIN MANUFACTURER'S OUTLET FACTORS AND RECOMMENDED TESTING PROCEDURES. CROSSCHECK THE SUMMATION OF REQUIRED OUTLET VOLUMES WITH REQUIRED FAN VOLUMES.
C. ADJUST TERMINAL OUTLETS AND INLETS FOR EACH SPACE TO INDICATED AIR FLOWS WITHIN SPECIFIED TOLERANCES OF INDICATED VALUES. MAKE ADJUSTMENTS USING VOLUME DAMPERS RATHER THAN EXTRACTORS AND THE DAMPERS AT AIR TERMINALS.
D. PREPARE TEST REPORTS WITH PERTINENT DESIGN DATA AND NUMBER IN SEQUENCE STARTING AT PUMP TO END OF SYSTEM. CHECK THE SUM OF BRANCH-CIRCUIT FLOWS AGAINST APPROVED PUMP FLOW RATE. CORRECT VARIATIONS THAT EXCEED PLUS OR MINUS 5 PERCENT.

3.7 CONTROLS AND ELECTRICAL COMPONENTS

A. WHERE REQUIRED, CONTRACTOR SHALL FURNISH A COMBINATION STARTER SIZED IN ACCORDANCE WITH THE MOTOR RATING. STARTER SHALL BE SUPPLIED WITH FUSES OR CIRCUIT BREAKERS, CONTROL TRANSFORMERS, OVERLOADS, ONE N.O. AND ONE N.C. AUXILIARY CONTRACTS, AND AN HOA SWITCH IN THE CABINET COVER. STARTER ENCLOSURE SHALL BE NEMA RATED FOR ITS LOCATION. STARTER SHALL BE WIRED AND INSTALLED BY THE ELECTRICAL CONTRACTOR.
B. CONTRACTOR SHALL PROVIDE A COMPLETE CONTROL SYSTEM TO OPERATE THE EQUIPMENT AS DESCRIBED IN THESE DOCUMENTS, SYSTEM SHALL INCLUDE THERMOSTAT, LOW VOLTAGE WIRING, REQUIRED CONDUIT, TRANSFORMERS, AND ASSOCIATED APPURTENANCES REQUIRED TO MEET THE INTENT OF THESE DOCUMENTS.
C. CONTRACTOR SHALL PROVIDE AND INSTALL UL LISTED DUCT SMOKE DETECTORS AS SHOWN ON THE DRAWINGS, DETECTORS SHALL HAVE AUXILIARY CONTACTS FOR CONNECTION TO THE FIRE ALARM SYSTEM IF REQUIRED. THIS CONTRACTOR SHALL BE RESPONSIBLE FOR LOW VOLTAGE TO SHUT DOWN HIS EQUIPMENT BASED ON THE STATUS OF THIS DEVICE. POWER WIRING AND WIRING TO FIRE ALARM SYSTEM TO BE BY OTHERS.

GENERAL HVAC NOTES

(RE: ALL MECHANICAL SHEETS)

G1 THE INTENTION OF THE CONTRACT DOCUMENTS IS TO INCLUDE ALL LABOR AND MATERIALS, AND EQUIPMENT, NECESSARY, OR REASONABLY INFERABLE AS BEING NECESSARY, FOR FURNISHING, INSTALLATION AND TESTING, COMPLETE AND READY FOR SAFE OPERATION OF THE SYSTEMS DESCRIBED HEREIN.

G2 THE MECHANICAL CONTRACTOR IS RESPONSIBLE FOR T-STATS, ALL LOW VOLTAGE WIRING AND REQUIRED CONDUIT.

G3 ALL OUTSIDE AIR DUCTS TO BE EXTERNALLY INSULATED.

G4 ALL SUPPLY DUCTS AND RETURN DUCTS TO BE INSULATED AND INTERNALLY LINED AS SHOWN ON DRAWING AND SPECIFICATIONS.

G5 DUCTWORK LAYOUT IS PARTIALLY DIAGRAMMATIC, OFFSETS AND ADJUSTMENTS MAY BE REQUIRED TO COORDINATE WITH LIGHTS, DUCTS, PLUMBING AND STRUCTURE.

G6 CONTRACTOR SHALL IDENTIFY ALL SERVICEABLE ITEMS (VALVES, DAMPERS, COILS, ETC.) SO THAT THE CEILING SUBCONTRACTOR MAY KNOW WHERE TO INSTALL ACCESS-TYPE PANELS SHOULD A LIFT-UP TYPE CEILING NOT BE INSTALLED. ARCHITECT SHALL APPROVE LOCATIONS OF ACCESS PANELS PRIOR TO INSTALLATION.

G7 ALL PENETRATIONS MADE THROUGH RATED ASSEMBLIES TO ACCOMMODATE WORK OF THIS SECTION, MUST BE SEALED TO MAINTAIN THE RATING OF SUCH ASSEMBLY BY A U.L RECOGNIZED SEALING METHOD.

G8 CONTRACTOR HAS SOLE RESPONSIBILITY TO COORDINATE ANY SUBSTITUTIONS WITH ALL OTHER DISCIPLINES, EQUIPMENT OF GREATER POWER, DIMENSION, CAPACITIES, AND RATINGS MAY BE FURNISHED PROVIDED SUCH PROPOSED EQUIPMENT HAS BEEN SUBMITTED FOR REVIEW, IN WRITING AND CONNECTING MECHANICAL AND ELECTRICAL SERVICES, CIRCUIT BREAKERS, CONDUIT, MOTORS, BASES, AND EQUIPMENT SPACES ARE ADJUSTED APPROPRIATELY. NO ADDITIONAL COSTS WILL BE APPROVED FOR THESE INCREASES, IF LARGER EQUIPMENT IS PROPOSED. IF MINIMUM ENERGY RATINGS OR EFFICIENCIES OF THE EQUIPMENT ARE SPECIFIED, THE EQUIPMENT MUST MEET THE DESIGN REQUIREMENTS AND COMMISSIONING REQUIREMENTS, CONTRACTOR IS SOLELY RESPONSIBLE FOR SUBSTITUTED EQUIPMENT MEETING THE INTENT OF THE ORIGINAL DESIGNED EQUIPMENT IN ALL ASPECTS.

MECHANICAL LEGEND

EQUIPMENT
- FLEXIBLE DUCTWORK
- LINED DUCTWORK
- DEMO
- THERMOSTAT
- TEMPERATURE SENSOR
- SMOKE DETECTOR
- CO2 SENSOR
- MOTORIZED DAMPER
- BAROMETRIC DAMPER
- MANUAL VOLUME DAMPER
- COMBINATION SMOKE/FIRE DAMPER
- FIRE DAMPER
- EQUIPMENT CALLOUT
- DETAIL CALLOUT
- TEMPERATURE GAUGE
- POINT OF CONNECTION
- INTAKE OR EXHAUST
- DIRECTION OF AIRFLOW
- SUPPLY DIFFUSER
- RETURN GRILLE
- EXHAUST GRILLE
- ROUND DUCTWORK BREAK
- DUCTWORK BREAK
- DUCTWORK RISE
- DUCTWORK DROP
- SPIN-IN SUPPLY (WITH VOLUME DAMPER)
- SPIN-IN RETURN/EXHAUST (WITH VOLUME DAMPER)
- 45° SQUARE DUCT TAKE-OFF FROM SQUARE DUCT
- 45° ROUND DUCT TAKE-OFF FROM SQUARE DUCT
- 45° ROUND DUCT TAKE-OFF FROM ROUND DUCT
- TURNING VANE
- MITERED CORNER
- RADIUS ELBOW

ABBREVIATIONS & DESCRIPTIONS

AC	AIR CONDITIONING
AFF	ABOVE FINISHED FLOOR
AHU	AIR HANDLING UNIT
BTU	BRITISH THERMAL UNITS
BTUH	BTU'S PER HOUR
CA	COMBUSTION AIR
CC	COOLING COIL
CFF	CAP FOR FUTURE
CFM	CUBIC FEET PER MINUTE
CHWR	CHILLED WATER RETURN
CHWS	CHILLED WATER SUPPLY
CLG	CEILING
CW	COLD WATER
DEG	DEGREE
DIA	DIAMETER
DB	DRY BULB TEMPERATURE
EA	EXHAUST AIR
EAT	ENTERING AIR TEMPERATURE
EER	ENERGY EFFICIENCY RATIO
ESP	EXTERNAL STATIC PRESSURE
EWT	ENTERING WATER TEMPERATURE
FCO	FLOOR CLEANOUT
FD	FIRE DAMPER
FLA	FULL LOAD AMPS
FLR	FLOOR
FPM	FEET PER MINUTE
FT	FEET
GA	GAUGE
GCO	GRADE CLEANOUT
GPM	GALLONS PER MINUTE
HC	HEATING COIL
HP	HORSEPOWER
IECC	INTERNATIONAL ENERGY CONSERVATION CODE
HVAC	HEATING, VENTILATING, AIR CONDITIONING
KES	KITCHEN EQUIPMENT SUPPLIER
KW	KILOWATT
KWH	KILOWATT HOUR
LAT	LEAVING AIR TEMPERATURE
MAX	MAXIMUM
MCA	MINIMUM CIRCUIT AMPS
MOCP	MAXIMUM OVERCURRENT PROTECTION
MIN	MINIMUM
NC	NOISE CRITERIA
NFPA	NATIONAL FIRE PROTECTION ASSOCIATION
NTS	NOT TO SCALE
OSA	OUTSIDE AIR
PD	PRESSURE DROP
PH	PHASE
PRV	PRESSURE REDUCING VALVE
RA	RETURN AIR
RPM	REVOLUTIONS PER MINUTE
RTU	ROOFTOP UNIT
SA	SUPPLY AIR
SEER	SEASONAL ENERGY EFFICIENCY RATIO
SFD/FSD	COMBINATION SMOKE/FIRE DAMPER
SP	STATIC STATIC PRESSURE
SYM	SYMBOL
T&P	TEMPERATURE AND PRESSURE
TEMP	TEMPERATURE
TYP	TYPICAL
UMC	UNIFORM MECHANICAL CODE
UPC	UNIFORM PLUMBING CODE
VTR	VENT THROUGH ROOF
V	VOLTS
WB	WET BULB
W/	WITH

MECHANICAL PLAN SHEET INDEX

Sheet No.	Sheet Name
M1	MECHANICAL TITLE SHEET
M2	MECHANICAL HVAC LAYOUT & GAS PIPING
M3	MECHANICAL HVAC PLAN

INDUSTRIAL ENGINEERING INCORPORATED

INDUSTRIAL ENGINEERING, INC

MECHANICAL-ELECTRICAL CONSULTANTS

3210 23RD AVE SE
RIO RANCHO, NM 87124
WWW.IEINM.COM
INFO@IEINM.COM

NOV 5, 2019

RICHARD A. LINDELL NEW MEXICO 8370 LICENSED PROFESSIONAL ENGINEER

Richard A. Lindell P.E.

NO	DATE	REVISION

PROJECT NAME

PROJECT ADDRESS & INFO

COPYRIGHT 2019 BY INDUSTRIAL ENGINEERING, INC. ALL RIGHTS RESERVED.

MECHANICAL TITLE SHEET

FILE: XXX
DRAWN BY: Author
CHECKED BY: Checker
PROJ. NO: 59301
DATE: NOV 5, 2019

M1

BIM 360://59301 Caliber Collision Paint Booth/59301 Caliber Collision MEP.rvt
11/5/2019 8:30:40 AM

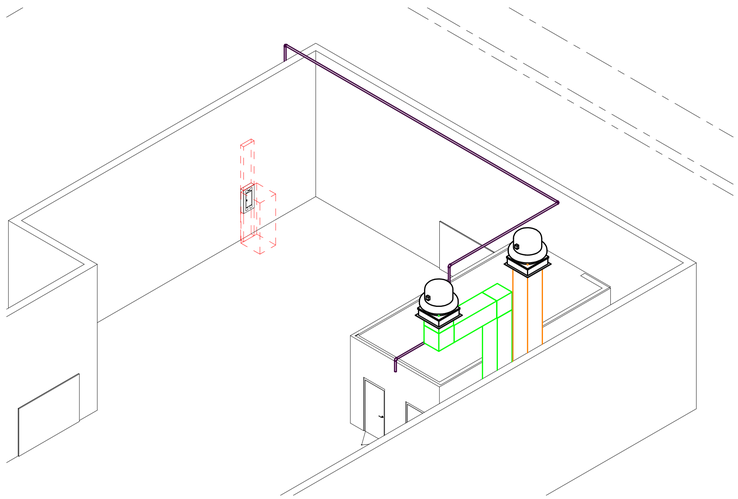

3 / M2 GAS PIPING ISOMETRIC VIEW
NO SCALE

BUILDING HVAC GENERAL NOTES

1. PAINT BOOTH, WITH HVAC FAN AND DISTRIBUTION PROVIDED AS A COMPLETE MANUFACTURED UNIT. PAINT BOOTH TO BE LISTED BY A NATIONALLY RECOGNIZED TESTING LABORATORY PER 2015 UMC § 302.1.

BUILDING HVAC KEYED NOTES

1. 1 1/4" 2PSI BLACK PIPE GAS PIPING ACROSS ROOF. DROP TO METER. INSTALL FULL BORE GAS SHUTOFF VALVE IMMEDIATELY DOWNSTREAM OF METER. COORDINATE METER REPLACEMENT WITH GAS COMPANY TO PROVIDE 2PSI GAS AT THE OUTLET OF THE METER. PAINT BOOTH IS SINGULAR EQUIPMENT INSTALLED ON THE GAS LINE. GAS COMPANY TO PROVIDE REQUIRED GAS PRESSURE AT METER PER GAS COMPANY DIRECTIVE.
2. DROP TO PAINT BOOTH. PROVIDE REGULATOR TO REDUCE PRESSURE TO 12 IWC. REGULATOR TO BE MINIMUM 10' FROM CONNECTION TO PAINT BOOTH. DROP THROUGH ROOF AS REQUIRED TO OBTAIN 10' SPACING. PIPE DOWNSTREAM FROM REGULATOR TO BE 1 1/2" DIAMETER.
3. 28"X28" 14,000 CFM .23 STATIC. EXHAUST DUCT. ROUTE DUCT STRAIGHT UP AND EXTEND 4' ABOVE ROOF. PROVIDE CAP AND BIRD SCREEN.
4. 28" X 28" 14,000 CFM .23 STATIC SUPPLY DUCT. ROUTE DUCT UP THROUGH ROOF AND EXTEND ALONG ROOF APPROXIMATELY 6' TO PROVIDE MINIMUM 10' SEPARATION FROM EXHAUST DUCT. PROVIDE CAP AND BIRD SCREEN.

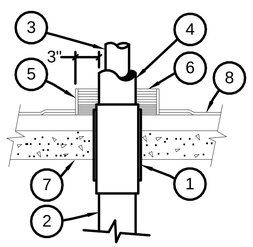

ROOF PENETRATION

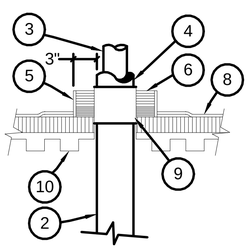

ROOF PENETRATION

2 / M2 Roof Pipe Penetration
NO SCALE

KEYED NOTES:

1. PIPE SLEEVE SIZED FOR PIPE WITH INSULATION.
2. INSULATION - SEE SPECS FOR THICKNESS.
3. PIPE
4. EXTERIOR INSULATION JACKET.
5. PITCH PAN, 18 GA. GALV. SHEET METAL BY MECHANICAL CONTRACTOR, SUPPLIED TO ROOFING CONTRACTOR.
6. FILL WITH PLASTIC FLASHING.
7. CONCRETE ROOF DECK.
8. ROOFING
9. CAULK WITH FIBEROUS MATERIAL BEFORE ADDING PLASTIC FLASHING.
10. STEEL DECK WITH INSULATION.

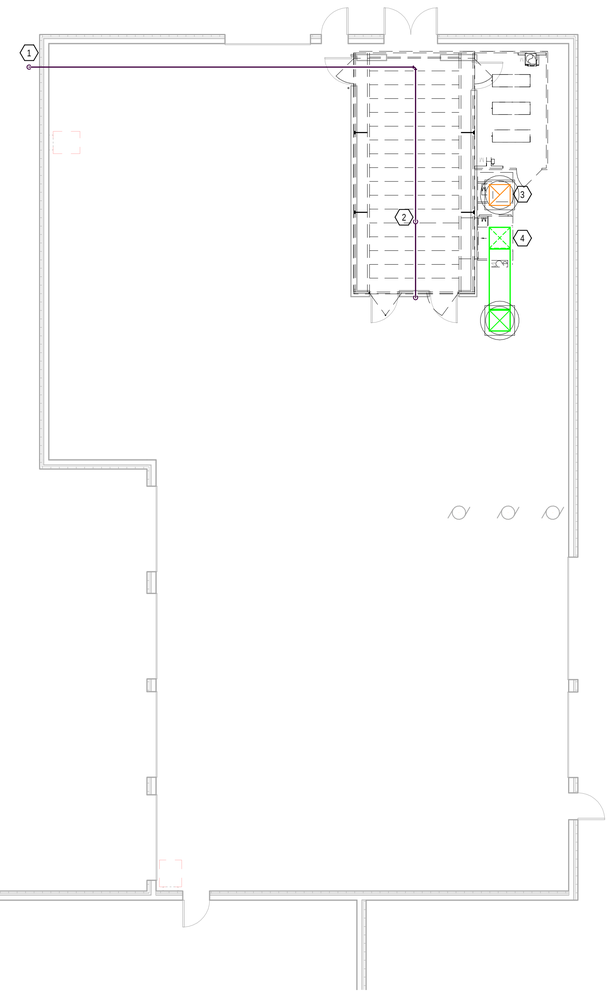

1 / M2 HVAC & Gas Piping Plan View
1/8" = 1'-0"
0 4' 8' 16'

INDUSTRIAL ENGINEERING, INC

MECHANICAL-ELECTRICAL CONSULTANTS

3210 23RD AVE SE
RIO RANCHO, NM 87124
WWW.IEINM.COM
INFO@IEINM.COM

NOV 5, 2019
RICHARD A. LINDELL
NEW MEXICO
8370
LICENSED PROFESSIONAL ENGINEER
Richard A. Lindell P.E.

NO	DATE	REVISION

PROJECT NAME

PROJECT ADDRESS & INFO

COPYRIGHT 2019 BY INDUSTRIAL ENGINEERING, INC. ALL RIGHTS RESERVED.

MECHANICAL HVAC LAYOUT & GAS PIPING

FILE: XXX
DRAWN BY: DAE
CHECKED BY: AS
PROJ. NO: 59301
DATE: NOV 5, 2019

M2

BIM 360://59301 Caliber Collision Paint Booth/59301 Caliber Collision MEP.rvt
11/5/2019 8:41:23 AM

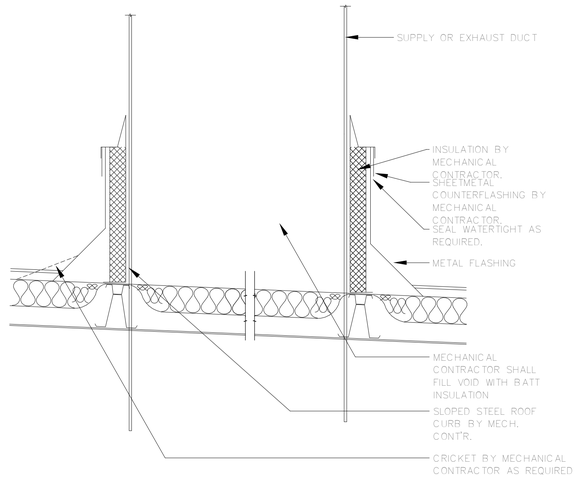

NOTE:
1. MECHANICAL CONTRACTOR TO VERIFY SIZE AND COORDINATE LOCATION OF CURB W/GENERAL CONTRACTOR.

2 / M3 ROOF CURB DETAIL
NO SCALE

SHEET M3 GENERAL NOTES

1. MECHANICAL CONTRACTOR TO ROUTE EXHAUST DUCT VERTICALLY THROUGH THE ROOF AND INSTALL CAP WITH BIRD SCREEN AT 4' ABOVE ROOF. ROUTE SUPPLY DUCT VERTICALLY THROUGH THE ROOF AND ALONG THE ROOF TO MAINTAIN A MINIMUM OF 10' HORIZONTALLY FROM THE EXHAUST DUCT. INSTALL CAP WITH BIRD SCREEN.

SHEET M3 KEYED NOTES

1. SEE ROOF DUCT PENETRATION DETAIL 3/M3.
2. MANUFACTURED PAINT BOOTH ASSEMBLY COMLETE WITH HVAC SYSTEM INCLUDING DUCT THROUGH ROOF.

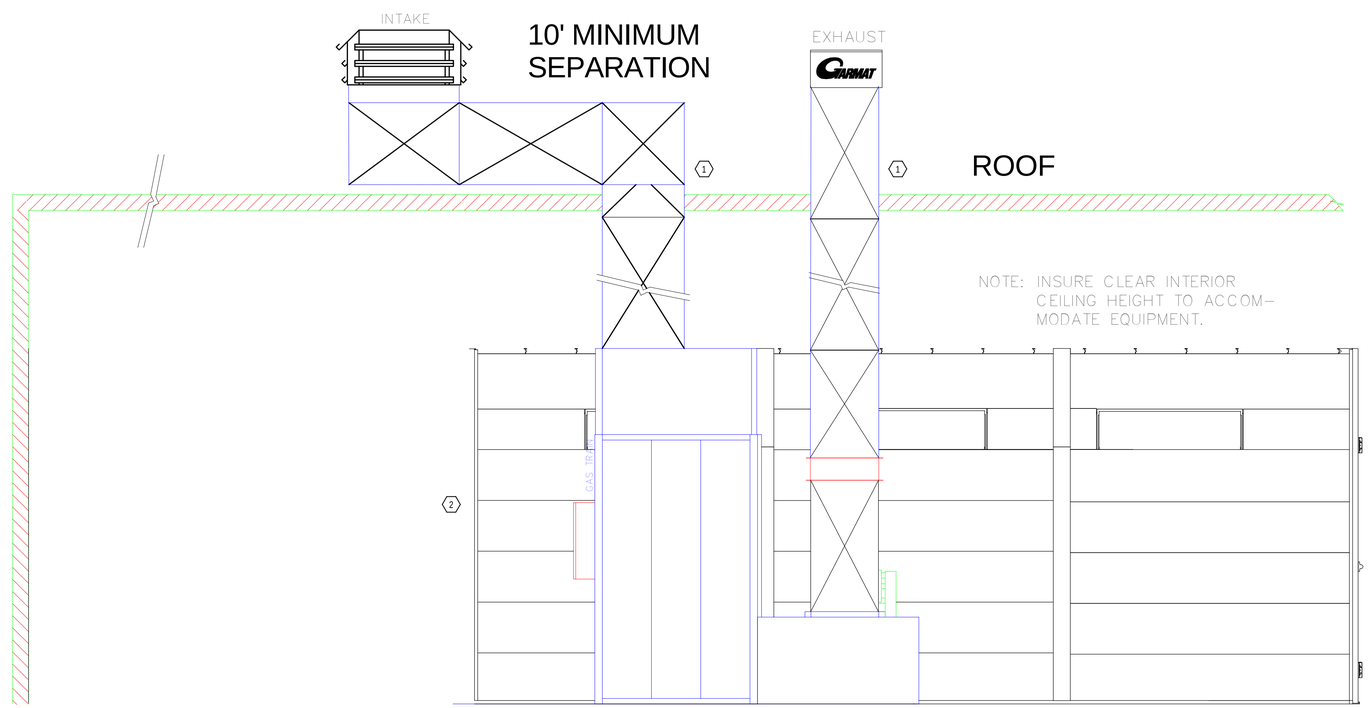

1 / M3 PAINT BOOTH ELEVATION VIEW
1/2" = 1'-0"
0 4' 8' 16'

INDUSTRIAL ENGINEERING, INC

MECHANICAL-ELECTRICAL CONSULTANTS

3210 23RD AVE SE
RIO RANCHO, NM 87124
WWW.IEINM.COM
INFO@IEINM.COM

09/24/19
RICHARD A. LINDELL
NEW MEXICO
8370
LICENSED PROFESSIONAL ENGINEER
Richard A. Lindell P.E.

NO	DATE	REVISION

PROJECT NAME

PROJECT ADDRESS & INFO

COPYRIGHT 2019 BY INDUSTRIAL ENGINEERING, INC. ALL RIGHTS RESERVED.

MECHANICAL HVAC PLAN

FILE: XXX
DRAWN BY: Author
CHECKED BY: Checker
PROJ. NO: 59301
DATE: 09/24/19

M3

BIM 360://59301 Caliber Collision Paint Booth/59301 Caliber Collision MEP.rvt
11/5/2019 8:30:53 AM

ELECTRICAL SYMBOL LEGEND

HT AFF	SYMBOL	DESCRIPTION
AS NOTED		SURFACE OR WALL MTD LIGHT (TYPE DENOTED)
AS NOTED	F	WALL MOUNTED EXTERIOR LIGHT (TYPE DENOTED)
AS NOTED	R	RECESSED LIGHT (TYPE DENOTED)
PER SCHED	AA	POLE MOUNTED LIGHT (TYPE DENOTED)
	G	SURFACE LIGHT (TYPE DENOTED)
	P1 P2	SUSPENDED OR PENDANT LIGHT (TYPE DENOTED)
	H	RECESSED LIGHT (TYPE DENOTED)
		STRIP LIGHT (TYPE DENOTED)
AS NOTED	T1 T1 TR1	TRACK AND TRACK LIGHT (TYPES DENOTED)
96"	6M	EMERGENCY BATTERY LIGHT (TYPE DENOTED)
12"*	E	EXIT SIGN (TYPE DENOTED)
AS NOTED		EMERGENCY LIGHT FIXTURE
48"		SINGLE POLE SW.
48"	3	3-WAY SW.
48"	4	4-WAY SW.
48"	K	KEYED SW.
48"		SW. W/PILOT
48"	D	DIMMER SWITCH
48"	OS	OCCUPANCY SENSOR SWITCH
48"	T	TIMER SWITCH
48"	SP	FAN SPEED CONTROL
48"	M	MOTOR HORSEPOWER RATED SWITCH
48"		PUSH BUTTON
18"		SINGLE RECEPT.
18"		DUPLEX RECEPT.
18"		SPLIT DUPLEX RECEPT/SWITCHED
18"		ISOLATED GROUND RECEPT (DUPLEX SHOWN)
18"		RECEPT ON EMERGENCY CKT (DUPLEX SHOWN)
18"		FOURPLEX RECEPT.
18"		FOURPLEX RECEPTACLE ON EMERGENCY CIRCUIT
		FLOOR RECEPT. (DUPLEX SHOWN)
AS NOTED		RECEPT ON DROP CORD (DUPLEX SHOWN)
		RECEPT ON CORD REEL (DUPLEX SHOWN)
		EQUIPMENT PLUG

HT AFF	SYMBOL	DESCRIPTION
18"	A	MULTIOUTLET ASSEMBLY (TYPE DENOTED)
18"	B	MULTIOUTLET ASSEMBLY (TYPE DENOTED)
84"	A	CLOCK (TYPE DENOTED)
		POWER POLE (OPEN OFFICE STYLE)
		GROUND ROD (PLAN VIEW)
AS NOTED		SPECIAL RECEPT. OR CONN. (SEE SCHEDULE)
AS NOTED	J	JUNCTION BOX
		PULL BOX
72"***		CIRCUIT BREAKER PANEL
72"***		POWER OR DISTRIBUTION PANEL
72"***		SPECIAL CABINET (TYPE DENOTED)
	T	TRANSFORMER (TYPE DENOTED)
	SF-1	MOTOR (SEE SCHEDULE)
72"***		MAG. MOTOR STARTER OR CONTACTOR
72"***		COMB. MOTOR STARTER (NON-FUSED)
72"***		COMB. MOTOR STARTER (FUSED)
72"***		SAFETY DISC. SW. (NON-FUSED)
72"***		SAFETY DISC. SW. (FUSED)
		VARIABLE FREQUENCY DRIVE
72"***		RELAY
72"***		ENCLOSED CIRCUIT BREAKER
	OS	OCCUPANCY SENSOR - TYPE DENOTED
	LS A	LIGHT LEVEL SENSOR - TYPE DENOTED
AS NOTED	PC	PHOTOCELL
48"	TC	TIME CONTROL SWITCH (TIME SWITCH)
48"	H	HUMIDISTAT
48"	T	THERMOSTAT
PER SCHED	H1	BASEBOARD HEATER (TYPE DENOTED)
PER SCHED	H2	WALL HEATER (TYPE DENOTED)
PER SCHED	D1	HAND OR HAIR DRYER (TYPE DENOTED)
		SOLENOID VALVE
		DASHED SYMBOL INDICATES EXISTING
		HATCHED SYMBOL INDICATES REMOVED

HT AFF	SYMBOL	DESCRIPTION
		CONDUIT/WIRE
	3	CONDUIT SLEEVE (SIZE DENOTED)
18"		TELEPHONE OUTLET (TYPE DENOTED)
48"****	W	WALL TELEPHONE OUTLET (TYPE DENOTED)
18"		INFORMATION OUTLET (TYPE DENOTED)
48"	C	INTERCOM OUTLET LOCATION
18"		TELEVISION OUTLET
18"		MULTIPLE SERVICE OUTLET (TYPE DENOTED)
		OUTLET IN FLOOR (MICROPHONE SHOWN)
		MULTIPLE SERVICE FLR OUTLET (TYPE DENOTED)
		WIRELESS ACCESS POINT
84"	Q	BELL
84"		BUZZER
		CHIME
48"****	D	DOOR SIGNAL - APT. UNIT
84"	S	SPEAKER (WALL OR CEILING MT.)
48"	V	VOLUME CONTROL
18"	M	MICROPHONE OUTLET
18"	P	PROJECTOR CONTROL OUTLET
		ANTENNA
	1	KEYED NOTE (SEE SCHEDULE)
72"***	FA ANNUN	FIRE ALARM REMOTE ANNUNCIATOR
	S, P	SMOKE DETECTOR (TYPE DENOTED)
	H, F RIF135	HEAT DETECTOR (TYPE & TEMP DENOTED)
	S RIF135	DUCT SMOKE DETECTOR (TYPE DENOTED)
	ES	ELECTRIC STRIKE
	M	MAGNETIC LOCK
48"****	CR	CARD READER
48"***	K	KEYPAD
144"*	MD IR	MOTION DETECTOR (TYPE DENOTED)
AS NOTED		CCTV CAMERA
AS NOTED		CCTV CAMERA WITH PAN/TILT DRIVE

ALL DISTANCES ARE TO CENTER OF DEVICE OR EQUIPMENT UNLESS OTHERWISE NOTED. DEVICES INDICATED AT 48" MAY NOT BE INSTALLED WITH ANY OPERABLE PART HIGHER THAN 48". DEVICES MAY BE INSTALLED IN CONCRETE MASONRY UNITS WITH THE TOP OF THE DEVICE AT 48".

* DISTANCE ABOVE TOP OF DOOR FRAME *** DISTANCE TO HIGHEST OPERABLE PART OF EQUIPMENT ***** DISTANCE TO BOTTOM OF DEVICE

** DISTANCE TO TOP OF EQUIPMENT OR DEVICE **** DISTANCE BELOW CEILING

ELECTRICAL ABBREVIATIONS LIST

1P	1 POLE (2P, 3P, 4P, ETC.)
A	AMPERE
AC	ABOVE COUNTER OR AIR CONDITIONER
ACLG	ABOVE CEILING
ADO	AUTOMATIC DOOR OPENER
AF	AMP FRAME
AFF	ABOVE FINISHED FLOOR
AFG	ABOVE FINISHED GRADE
AFI	ARC FAULT CIRCUIT INTERRUPTER
AHU	AIR HANDLING UNIT
AL	ALUMINUM
ALT	ALTERNATE
AMP	AMPERE
AMPL	AMPLIFIER
ANNUN	ANNUNCIATOR
APPROX	APPROXIMATELY
AQ-STAT	AQUASTAT
ARCH	ARCHITECT, ARCHITECTURAL
AS	AMP SWITCH
AT	AMP TRIP
ATS	AUTOMATIC TRANSFER SWITCH
AUTO	AUTOMATIC
AUX	AUXILIARY
AV	AUDIO VISUAL
AWG	AMERICAN WIRE GAUGE
BATT	BATTERY
BD	BOARD
BLDG	BUILDING
BMS	BUILDING MANAGEMENT SYSTEM
C	CONDUIT
CAB	CABINET
CAT	CATALOG
CATV	CABLE TELEVISION
CB	CIRCUIT BREAKER
CCTV	CLOSED CIRCUIT TELEVISION
CKT	CIRCUIT
CLG	CEILING
COMB	COMBINATION
CMPR	COMPRESSOR
CONN	CONNECTION
CONST	CONSTRUCTION
CONT	CONTINUATION OR CONTINUOUS
CONTR	CONTRACTOR
CONV	CONVECTOR
CP	CIRCULATING PUMP
CRT	CATHODE-RAY TUBE
CT	CURRENT TRANSFORMER
CTR	CENTER
CU	COPPER
DCP	DOMESTIC WATER CIRCULATING PUMP
DEPT	DEPARTMENT
DET	DETAIL
DIA	DIAMETER
DISC	DISCONNECT
DIST	DISTRIBUTION
DN	DOWN
DPR	DAMPER
DS	SAFETY DISCONNECT SWITCH
DT	DOUBLE THROW
DW	DISHWASHER
DWG	DRAWING
EC	ELECTRICAL CONTRACTOR
ELEC	ELECTRIC, ELECTRICAL
ELEV	ELEVATOR
EM	EMERGENCY
EMS	ENERGY MANAGEMENT SYSTEM
EMT	ELECTRICAL METALLIC TUBING
EP	ELECTRIC PNEUMATIC
EQUIP	EQUIPMENT
EWC	ELECTRIC WATER COOLER
EXIST	EXISTING
EXH	EXHAUST
EXP	EXPLOSION PROOF
FA	FIRE ALARM
FABP	FIRE ALARM BOOSTER POWER SUPPLY PANEL
FACP	FIRE ALARM CONTROL PANEL
FCU	FAN COIL UNIT
FIXT	FIXTURE
FLR	FLOOR
FLUOR	FLUORESCENT
FU	FUSE
FUDS	FUSED SAFETY DISCONNECT SWITCH
GA	GAUGE
GAL	GALLON
GALV	GALVANIZED
GC	GENERAL CONTRACTOR
GD	GARBAGE DISPOSAL
GEN	GENERATOR
GFI	GROUND FAULT CIRCUIT INTERRUPTER
GFP	GROUND FAULT PROTECTOR
GND	GROUND
GR	GAS RANGE
GRS	GALVANIZED RIGID STEEL (CONDUIT)
GYP BD	GYPSUM BOARD
HOA	HANDS-OFF-AUTOMATIC SWITCH
HORIZ	HORIZONTAL
HP	HORSEPOWER
HPF	HIGH POWER FACTOR
HT	HEIGHT
HTG	HEATING
HTR	HEATER
HV	HIGH VOLTAGE
HVAC	HEATING, VENTILATING AND AIR CONDITIONING
HWP	HYDRONIC WATER PUMP
IC	INTERRUPTING CAPACITY
IG	ISOLATED GROUND
IMC	INTERMEDIATE METAL CONDUIT
INCAND	INCANDESCENT
IR	INFRARED
IW	INTERLOCK WITH
J-BOX	JUNCTION BOX
KV	KILOVOLT
KVA	KILOVOLT-AMPERE
KVAR	KILOVOLT-AMPERE REACTIVE
KW	KILOWATT
KWH	KILOWATT HOUR
LOC	LOCATE OR LOCATION
LT	LIGHT
LTG	LIGHTING
LTNG	LIGHTNING
LV	LOW VOLTAGE
MAX	MAXIMUM
MAG.S	MAGNETIC STARTER
M/C	MOMENTARY CONTACT
MC	MECHANICAL CONTRACTOR
MCB	MAIN CIRCUIT BREAKER
MCC	MOTOR CONTROL CENTER
MDC	MAIN DISTRIBUTION CENTER
MDP	MAIN DISTRIBUTION PANEL
MFR	MANUFACTURER
MFS	MAIN FUSED DISCONNECT SWITCH
MH	MANHOLE
MIC	MICROPHONE
MIN	MINIMUM
MISC	MISCELLANEOUS
MLO	MAIN LUGS ONLY
MMS	MANUAL MOTOR STARTER
MOA	MULTIOUTLET ASSEMBLY
MSP	MOTOR STARTER PANELBOARD
MSBD	MAIN SWITCHBOARD
MT	MOUNT
MT.C	EMPTY CONDUIT
MTS	MANUAL TRANSFER SWITCH
MTR	MOTOR, MOTORIZED
MW	MICROWAVE
N.C.	NORMALLY CLOSED
NEC	NATIONAL ELECTRICAL CODE
NEMA	NATIONAL ELECTRICAL MANUFACTURER'S ASSOCIATION
NFDS	NON-FUSED SAFETY DISCONNECT SWITCH
NIC	NOT IN CONTRACT
NL	NIGHT LIGHT
N.O.	NORMALLY OPEN
NPF	NORMAL POWER FACTOR
NTS	NOT TO SCALE
OH	OVERHEAD
OL	OVERLOADS
PA	PUBLIC ADDRESS
PB	PULL BOX OR PUSHBUTTON
PE	PNEUMATIC ELECTRIC
PED	PEDESTAL
PF	POWER FACTOR
PH	PHASE
PIV	POST INDICATING VALVE
PNL	PANEL
PP	POWER POLE
PR	PAIR
PRI	PRIMARY
PROJ	PROJECTION
PRV	POWER ROOF VENTILATOR
PT	POTENTIAL TRANSFORMER
PVC	POLYVINYL CHLORIDE (CONDUIT)
PWR	POWER
QUAN	QUANTITY
RCPT	RECEPTACLE
REQD	REQUIRED
RM	ROOM
RSC	RIGID STEEL CONDUIT
RTU	ROOF TOP UNIT
SC	SURFACE CONDUIT
SEC	SECONDARY
SHT	SHEET
SIM	SIMILAR
S/N	SOLID NEUTRAL
SPEC	SPECIFICATION
SPKR	SPEAKER
SP	SPARE
SR	SURFACE RACEWAY
SS	STAINLESS STEEL
SSW	SELECTOR SWITCH
S/S	STOP/START PUSHBUTTONS
STA	STATION
STD	STANDARD
SURF	SURFACE MOUNTED
SW	SWITCH
SWBD	SWITCHBOARD
SYM	SYMMETRICAL
SYS	SYSTEM
TEL	TELEPHONE
TEL/DATA	TELEPHONE/DATA
TERM	TERMINAL
TL	TWIST LOCK
TR	TAMPER RESISTANT
T-STAT	THERMOSTAT
TTC	TELEPHONE TERMINAL CABINET
TV	TELEVISION
TVTC	TELEVISION TERMINAL CABINET
TYP	TYPICAL
UC	UNDER COUNTER
UE	UNDERGROUND ELECTRICAL
UG	UNDERGROUND
UH	UNIT HEATER
UT	UNDERGROUND TELEPHONE
UTIL	UTILITY
UV	UNIT VENTILATOR OR ULTRAVIOLET
V	VOLT
VA	VOLT-AMPERES
VDT	VIDEO DISPLAY TERMINAL
VERT	VERTICAL
VFD	VARIABLE FREQUENCY DRIVE
VOL	VOLUME
W	WATT
W/	WITH
WG	WIRE GUARD
WH	WATER HEATER
W/O	WITHOUT
WP	WEATHERPROOF
XFMR	TRANSFORMER
XFR	TRANSFER
∠	ANGLE
@	AT
Δ	DELTA
'	FEET
"	INCHES
#	NUMBER
ϕ	PHASE
℄	CENTER LINE
P	PLATE

ELECTRICAL SYMBOL NOTES

A2 12 b — THE LIGHTING FIXTURE TYPE IS INDICATED BY AN UPPER CASE LETTER. THE CIRCUIT DESIGNATION IS INDICATED BY A NUMBER. THE SWITCH DESIGNATION IS INDICATED BY A LOWER CASE LETTER.

EXAMPLE 1: LIGHTING FIXTURE TYPE "A" IS CONNECTED TO CIRCUIT 12 AND CONTROLLED BY SWITCH "b".

E 14 — EXIT LIGHTS. STEM INDICATES WALL MOUNTING. NO STEM INDICATES CEILING MOUNTING. SHADED AREA INDICATES ILLUMINATED FACE(S). ARROW INDICATES DIRECTIONAL ARROW ON ILLUMINATED FACE(S). THE CIRCUIT DESIGNATION IS INDICATED BY A NUMBER. EXAMPLE: THE WALL MOUNTED EXIT LIGHT TYPE "E" WITH SINGLE FACE AND DIRECTIONAL ARROW IS CONNECTED TO CIRCUIT 14.

16 c — DEVICES. THE CIRCUIT DESIGNATION IS INDICATED BY A NUMBER UNLESS WIRING IS SHOWN FOR CIRCUIT DESIGNATIONS. THE SWITCH SIGNATION IS INDICATED BY A LOWER CASE LETTER. EXAMPLE: SPLIT DUPLEX RECEPTACLE IS CONNECTED TO CIRCUIT 16 AND ONE RECEPTACLE OUTLET IS CONTROLLED BY SWITCH "c".

d — THE CONTROL DEVICE DESIGNATION IS INDICATED BY A LOWER CASE LETTER. EXAMPLE: SINGLE POLE SWITCH "d" TO CONTROL LIGHTING FIXTURES INDICATED BY "d".

D e — WALL BOX DIMMER WITH SWITCH DESIGNATION.

1 — KEYED NOTE. SEE THE KEYED NOTES ON THAT SHEET FOR THE NOTE NUMBER INDICATED IN THE HEXAGON.

CONDUIT SHOWN WITHOUT SLASH MARKS SHALL CONTAIN 2 # 12 CONDUCTORS IN 3/4" CONDUIT UNLESS SPECIFIC EQUIPMENT REQUIRES A DIFFERENT SIZE.

#10 — CONDUIT SHOWN WITH SLASH MARKS SHALL CONTAIN 1 # 12 CONDUCTOR PER SLASH MARK IN 3/4" CONDUIT UNLESS A CONDUCTOR AND CONDUIT SIZE IS SHOWN ADJACENT TO THE SLASH MARKS. SLASH MARK INDICATORS ARE: SHORT STRAIGHT=PHASE CONDUCTOR, LONG STRAIGHT=NEUTRAL CONDUCTOR, GROUND CONDUCTOR IS IMPLIED - NOT SHOWN ON DRAWINGS

LPN-102 1,3,5 — HOME RUN TO BRANCH CIRCUIT PANELBOARD. THE PANELBOARD DESIGNATION IS SHOWN ADJACENT TO THE HOME RUN ARROW. EXAMPLE: HOME RUN TO PANELBOARD LPN-102; CIRCUITS 1, 3, 5.

1,3,5 — SPECIAL CONNECTIONS. SEE KEYED NOTE OR EQUIPMENT SCHEDULE FOR THE LOAD DESCRIPTION AND TYPE OF CONNECTION.

SF-1 2,4,6 — MOTOR CONNECTIONS. THE MOTOR IS INDICATED BY A NUMBER WITHIN OR CHARACTERS ADJACENT TO THE MOTOR SYMBOL. SEE THE MOTOR AND EQUIPMENT SCHEDULE FOR THE MOTOR DESCRIPTION AND ELECTRICAL REQUIREMENTS. THE CIRCUIT DESIGNATION IS INDICATED BY A NUMBER(S) ADJACENT TO THE SYMBOL. EXAMPLE: MOTOR SF-1; 3 PHASE CONNECTION TO CIRCUITS 2, 4, 6.

GENERAL ELECTRICAL NOTES

A. ALL RECEPTACLES SHALL BE TAMPER RESISTANT TYPE RECEPTACLES.

B. FIRE ALARM SYSTEM TO BE DESIGN-BUILD BY THE ELECTRICAL CONTRACTOR.

SCOPE OF ELECTRICAL WORK

BUILDING IS UNDER NEW OWNERSHIP. ENTIRE BUILDING TO BE RENOVATED IN THE FUTURE. EXISTING PROJECT LIMITED TO BUILDING OUT 1 ROOM FOR FUTURE GROW ROOM.

1. DEMO: REMOVE EXISTING PANEL P2X AND RELOCATE ANY REMAINING ACTIVE CIRCUITS TO ADJACENT PANELS
2. NEW CONSTRUCITON: INSTALL NEW ELECTRICAL PANELS "P2" AND "P4" LOCATED WHERE SHOWN ON PLANS. INSTALL NEW RECEPTACLES IN FUTURE GROW ROOM AS SHOWN ON PLANS. INSTALL NEW AMBIENT LIGHT IN FUTURE GROW ROOM AS SHOWN ON PLANS.

SPECIFIC CODE NOTES

FIRE PROTECTION REQUIREMENTS

A. PENETRATIONS IN WALLS REQUIRING PROTECTED OPENINGS MUST BE FIRESTOPPED WITH AN APPROVED MATERIAL.
   1. CONDUITS MAY PENETRATE WALLS OR PARTITIONS, PROVIDED THEY ARE FIRE-STOPPED.
   2. OPENINGS FOR STEEL ELECTRICAL BOXES NOT EXCEEDING 16 SQUARE INCHES ARE PERMITTED PROVIDED OPENINGS DO NOT AGGREGATE MORE THAN 100 SQUARE INCHES FOR ANY 100 SQUARE FEET OF WALL OR PARTITION.
   3. OUTLET BOXES ON OPPOSITE SIDES OF WALLS OR PARTITIONS MUST BE SEPARATED BY A HORIZONTAL DISTANCE OF 24 INCHES.

B. LIGHT FIXTURES AND OTHER APPARATUS SUPPORTED BY THE ACOUSTICAL CEILING GRID MUST MEET THE REQUIREMENTS OF NEC SECTION 410.16, MEANS OF SUPPORT.

C. RECESSED LIGHTING FIXTURES INSTALLED IN FIRE RATED CEILING ASSEMBLIES SHALL BE FIRE RATED FIXTURES BEARING THE UL FIRE RATED LABEL. FIXTURES SHALL BE INSTALLED IN ACCORDANCE WITH THE UL FIRE RESISTANCE DIRECTORY, AND SHALL INCLUDE A FIRE RATED ENCLOSURE INSTALLED OVER THE FIXTURE THAT MEETS THE REQUIREMENTS OF THE UL FIRE RESISTANCE DIRECTORY.

ELECTRICAL PLAN SHEET...

Sheet No.	Sheet Name
E1	ELECTRICAL SYMBOLS AND ABBREVIATION
E2	ELECTRICAL PROCESS POWER PLAN
E3	ELECTRICAL SPECIFICATIONS

INDUSTRIAL ENGINEERING, INC

MECHANICAL-ELECTRICAL CONSULTANTS

3210 23RD AVE SE
RIO RANCHO, NM 87124
WWW.IEINM.COM
INFO@IEINM.COM

NOV 5, 2019

DAVID A. EXE — NEW MEXICO — 17593 — LICENSED PROFESSIONAL ENGINEER

NO	DATE	REVISION

PROJECT NAME

PROJECT ADDRESS & INFO

COPYRIGHT 2019 BY INDUSTRIAL ENGINEERING, INC. ALL RIGHTS RESERVED.

ELECTRICAL SYMBOLS AND ABBREVIATION

FILE: XXX
DRAWN BY: DAE
CHECKED BY: DAE
PROJ. NO: 59301
DATE: NOV 5, 2019

E1

BIM 360://59301 Caliber Collision Paint Booth/59301 Caliber Collision MEP.rvt
11/5/2019 8:30:04 AM

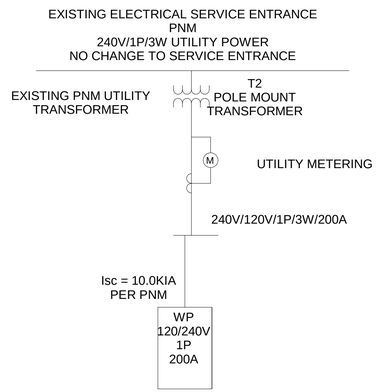

3 / E2 1-Line Diagram Panel "WP"
NO SCALE

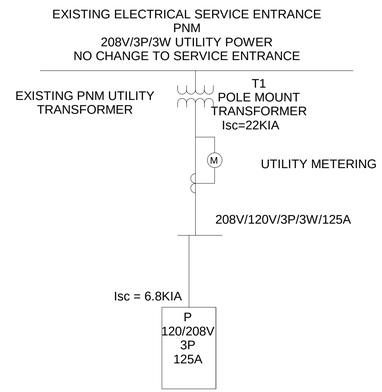

2 / E2 1-Line Diagram Panel "P"
NO SCALE

PROCESS POWER KEYED NOTES (1)

1. CIRCUIT PAINT BOOTH FROM EXISTING PANEL "P", 120/208V/3P/3W/10KIA. CONNECT TO CIRCUITS 8,10,12 ABANDONED BY REMOVAL OF EXISTING PAINT BOOTH.

PROCESS POWER GENERAL NOTES

1. FAULT CURRENT AT PANEL P = 6,721 AMP.
2. FAULT CURRENT AT PANEL WP = 10,000 AMP PER PNM

PANEL: P

LOCATION:
MOUNTING: Surface 1
MAIN DEVICE: 125 A MLO
BUS AMPS:

VOLTAGE: 208Y/120 V. 3 ø 4 W.
A.I.C. RATING: 10,000
SPECIAL:

LOAD DESCRIPTION	NOTES	TIME SCHED	CNTRL TYPE	CHNL TYPE	BKR	P	CKT	PHASE A kVA	PHASE B kVA	PHASE C kVA	CKT	P	BKR	CHNL TYPE	CNTRL TYPE	TIME SCHED	NOTES	LOAD DESCRIPTION
							1	0.0	0.2		2	1	20 A					SPACE
AIR CONDITIONING					60 A	3	3		0.0	0.2	4	1	20 A					SPACE
							5			0.0	0.2	6	1	20 A				RCPT
PAINT BOOTH ROOF					20 A	3	7	0.0	0.0		8							
							9		0.0	0.0	10	3	60 A					PAINT BOOTH
							11			0.0	0.0	12						
MTR					20 A	3	13	0.0	0.2		14	1	20 A					SPACE
							15		0.0	0.2	16	1	20 A					RCPT
							17			0.0	0.2	18	1	20 A				RCPT
					TOTAL LOAD:			0 kVA	0 kVA	0 kVA								
					TOTAL AMPS:			3 A	3 A	3 A								

LOAD CLASSIFICATION	CONNECTED	DEMAND	ESTIMATED	PANEL TOTALS	
RCPT	1080 VA	100.00%	1080 VA		
MTR	0 VA	0.00%	0 VA	**CONNECTED LOAD:**	1080 VA
				ESTIMATED DEMAND:	1080 VA
				CONNECTED CURRENT:	3 A
				EST. DEMAND CURRENT:	3 A

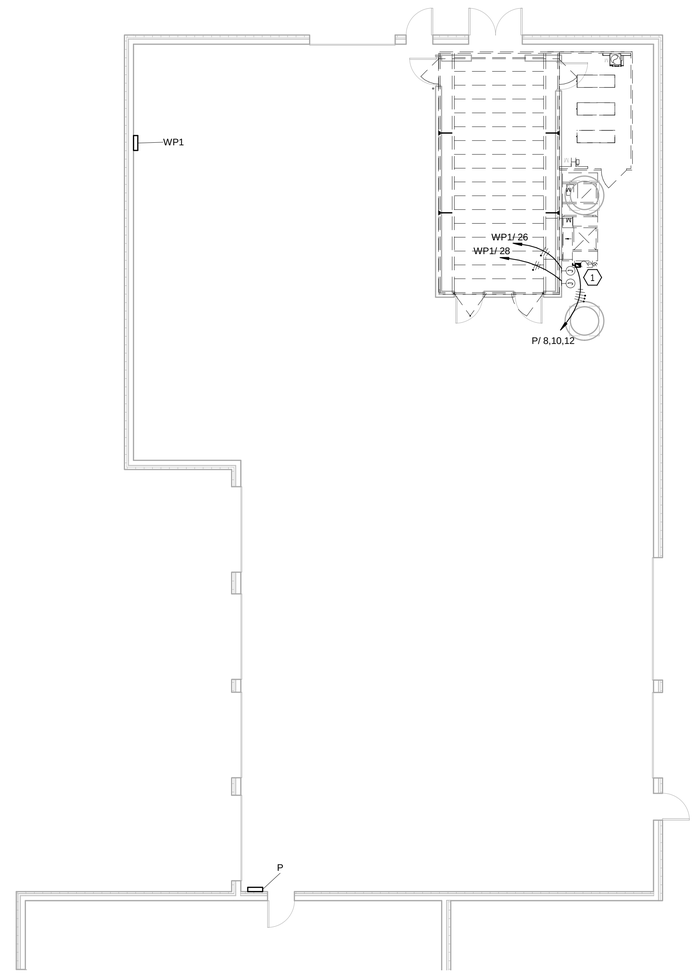

1 / E2 Power
1/8" = 1'-0"
0 4' 8' 16'

INDUSTRIAL ENGINEERING, INC

MECHANICAL-ELECTRICAL CONSULTANTS

3210 23RD AVE SE
RIO RANCHO, NM 87124
WWW.IEINM.COM
INFO@IEINM.COM

NOV 5, 2019
DAVID A. EXE
NEW MEXICO
17593
LICENSED PROFESSIONAL ENGINEER

NO	DATE	REVISION

PROJECT NAME

PROJECT ADDRESS & INFO

COPYRIGHT 2019 BY INDUSTRIAL ENGINEERING, INC. ALL RIGHTS RESERVED.

ELECTRICAL PROCESS POWER PLAN

FILE: XXX
DRAWN BY: Author
CHECKED BY: Checker
PROJ. NO: 59301
DATE: NOV 5, 2019

E2

BIM 360://59301 Caliber Collision Paint Booth/59301 Caliber Collision MEP.rvt
11/5/2019 8:30:18 AM

DIVISION 16 ELECTRICAL SPECIFICATIONS

PART 1 - GENERAL

1.01 GENERAL CONDITIONS

A. THE GENERAL CONDITIONS AND THE SPECIAL CONDITIONS OF THE ARCHITECTURAL SPECIFICATIONS SHALL BE CONSIDERED AS AN INTEGRAL PART OF THESE ELECTRICAL SPECIFICATIONS.

1.02 DRAWINGS AND DOCUMENTS

A. THESE SPECIFICATIONS AND THE CORRESPONDING DRAWINGS FORM A COMPLETE SET OF PLANS FOR THE ELECTRICAL WORK FOR THIS PROJECT. WHAT IS REQUIRED BY EITHER SHALL BE AS BINDING AS IF REQUIRED BY BOTH.

1.03 SCOPE OF WORK

A. THE CONTRACTOR SHALL FURNISH ALL LABOR, MATERIALS, TOOLS, SKILLS, AND EQUIPMENT FOR THE INSTALLATION OF, AND INSTALL THE ELECTRICAL EQUIPMENT AND THE ELECTRICAL WIRING IN AND ABOUT THE PROJECT; ALL AS SHOWN ON THE DRAWINGS AND/OR AS DESCRIBED IN THESE SPECIFICATIONS.
B. WHERE CONNECTIONS ARE TO BE MADE TO EQUIPMENT FURNISHED BY OTHERS, THE CONTRACTOR SHALL OBTAIN EXACT LOCATION OF CONNECTION FROM THE EQUIPMENT SUPPLIER.
C. ALL CIRCUITS SPECIFIED HEREIN ARE DESIGNED ON THE BASIS OF LOAD REQUIREMENTS AND CONTROL PROCEDURES AS INDICATED. THE CONTRACTOR SHALL MAKE THE NECESSARY CHANGES TO THE CIRCUITS AND CONTROL EQUIPMENT WHERE MOTORS, APPLIANCES, AND DEVICES FURNISHED BY THE CONTRACTOR HAVE OTHER RATINGS THAN THOSE INDICATED.
D. THE OMISSION OF EXPRESS REFERENCE TO ANY PARTS NECESSARY FOR, OR REASONABLY INCIDENTAL TO, THE COMPLETE INSTALLATION SHALL NOT BE CONSTRUED AS RELEASING THE CONTRACTOR FROM FURNISHING SUCH PARTS.

1.04 CODES, INSPECTIONS, AND FEES

A. THE COMPLETED ELECTRICAL INSTALLATION SHALL COMPLY WITH THE LATEST EDITION OF THE NATIONAL ELECTRICAL CODE AS WELL AS ALL APPLICABLE FEDERAL, STATE, AND LOCAL CODES, REGULATIONS, AND STANDARDS, INCLUDING INTERPRETATIONS OF THESE BY APPROPRIATE AUTHORITIES HAVING JURISDICTION. THIS SHALL NOT BE CONSTRUED TO PERMIT A LOWER GRADE OF CONSTRUCTION WHERE THE DRAWINGS AND SPECIFICATIONS CALL FOR WORKMANSHIP OR MATERIALS IN EXCESS OF CODE OR REGULATORY REQUIREMENTS.
B. THE WORK SPECIFIED HEREIN SHALL BE SUBJECT TO INSPECTION AND APPROVAL BY AUTHORIZED REPRESENTATIVES OF THE NATIONAL BOARD OF FIRE UNDERWRITERS, STATE AND LOCAL AUTHORITIES HAVING JURISDICTION, AND THE ENGINEER. THE CONTRACTOR SHALL MAKE THE NECESSARY ARRANGEMENTS TO HAVE THE ELECTRICAL WORK INSPECTED BY THE APPROPRIATE INSPECTOR(S) AND SHALL PROVIDE TWO (2) COPIES OF EVERY FINAL SIGNED "CERTIFICATE OF INSPECTION" TO THE OWNER.
C. THE CONTRACTOR SHALL OBTAIN AND PAY FOR ALL LICENSES AND PERMITS, AND ALLFEES AND CHARGES FOR ALL WORK INSTALLED BY THE CONTRACTOR. THE CONTRACTOR SHALL ALSO PAY ALL FEES AND CHARGES FOR CONNECTION TO ELECTRIC SERVICES.

1.05 INSPECTION OF SITE

A. BEFORE SUBMITTING A PROPOSAL FOR THE WORK CONTEMPLATED, EACH BIDDER SHALL EXAMINE THE SITE AND BECOME FAMILIAR WITH ALL EXISTING CONDITIONS AND LIMITATIONS. NO EXTRA COMPENSATION WILL BE ALLOWED BECAUSE THE CONTRACTOR MISUNDERSTOOD THE AMOUNT OF WORK INVOLVED OR LACKED KNOWLEDGE OF ANY EXISTING CONDITION AT ANY LOCATION.

1.06 EXISTING WIRING AND EQUIPMENT

A. ALL EXISTING WIRING, FIXTURES, AND EQUIPMENT SHALL REMAIN AS INSTALLED EXCEPT WHERE REMOVAL IS CALLED FOR IN THE DRAWINGS AND SPECIFICATIONS OR IS MADE NECESSARY BY THE ALTERATIONS TO THE BUILDING STRUCTURE IN THE REMODELED AREAS. ALL CONDUITS AND WIRING UNCOVERED BY OTHER CONTRACTORS WITHIN THE EXISTING BUILDING WALLS OR STRUCTURE AND/OR REQUIRING RELOCATION TO COMPLETE THE REMODELING SHALL BE RELOCATED OR REROUTED AS PART OF THIS CONTRACT. FOR EXAMPLE, WHERE THE GENERAL CONTRACTOR REMOVES A WALL, OR CUTS A DOOR OR WINDOW OPENING INTO AN EXISTING WALL, ANY CONDUITS UNCOVERED SHALL BE REROUTED BY ELECTRICAL CONTRACTOR AT NO ADDITIONAL COST TO THE OWNER.
B. ALL EXISTING WORK ALTERED DURING THE COURSE OF REMODELING SHALL BE PLACED IN SAFE OPERATING CONDITION AND SHALL REMAIN IN SERVICE UNLESS OTHERWISE NOTED, AND SHALL BE RESTORED TO SATISFACTORY OPERATING CONDITION. CONNECTIONS TO AND EXTENSIONS FROM EXISTING WIRING SHALL BE INSTALLED IN THE SAME MANNER AS CALLED FOR IN NEW WIRING. WHERE CONDUIT OR OUTLETS ARE REMOVED, THE REMAINING RUNS OF RACEWAY SHALL BE RECONNECTED TO FORM CONTINUOUS RACEWAYS WITH NEW CONDUCTORS INSTALLED FROM LAST REMAINING OUTLET BOX. WHEREVER IT IS NECESSARY TO WITHDRAW LESS THAN ALL EXISTING CONDUCTORS FROM EXISTING RACEWAYS, REMAINING EXISTING CONDUCTORS SHALL BE REPLACED WITH NEW.
C. THE CONTRACTOR SHALL REMOVE ONLY EXISTING WORK SO NOTED, SPECIFIED, OR NECESSARY FOR COMPLETION OF HIS WORK. OWNER SHALL HAVE THE OPTION OF RETAINING ANY ITEM OF MATERIAL REMOVED UNDER THIS CONTRACT. ITEMS OR MATERIALS NOT RETAINED BY OWNER SHALL BECOME THE PROPERTY OF THE CONTRACTOR AND SHALL BE REMOVED FROM THE PREMISES.
D. THROUGHOUT THE CONSTRUCTION PERIOD, THE CONTRACTOR SHALL BE RESPONSIBLE FOR MAINTAINING ELECTRIC SERVICE TO THE EXISTING BUILDING FOR CONSTRUCTION.

1.07 ENERGY CONSERVATION REBATES

A. THE ELECTRICAL CONTRACTOR SHALL PERFORM ALL WORK REQUIRED TO PROVIDE THE OWNER WITH ALL ELECTRIC UTILITY COMPANY ENERGY CONSERVATION REBATES THAT APPLY TO THIS PROJECT, SUCH AS ENERGY EFFICIENT FLUORESCENT LAMP REBATE, ENERGY EFFICIENT BALLAST REBATE, ETC. THE CONTRACTOR SHALL PROVIDE ALL FORMS REQUIRED TO OBTAIN THE REBATES AND PROVIDE ALL INFORMATION, INVOICES, ETC. AS REQUIRED BY THE UTILITY COMPANY.
B. THE CONTRACTOR SHALL PROVIDE A LETTER TO THE ENGINEER CERTIFYING THAT THE REBATE REQUIREMENTS HAVE BEEN MET.

1.08 MATERIALS AND EQUIPMENT

A. UNLESS OTHERWISE SPECIFIED, ALL MATERIAL AND EQUIPMENT SHALL BE NEW AND MANUFACTURED BY RECOGNIZED MANUFACTURERS. ALL MATERIALS AND EQUIPMENT SHALL MEET THE REQUIREMENTS OF GOVERNING CODES.
B. ALL MATERIAL AND EQUIPMENT SHALL BE LISTED AND LABELED BY UNDERWRITERS LABORATORIES, INC. (UL) AS CONFORMING TO ITS STANDARDS IN EVERY CASE WHERE SUCH A STANDARD HAS BEEN ESTABLISHED FOR THAT PARTICULAR TYPE OF MATERIAL OR EQUIPMENT.
C. WHERE THE TERM "EQUAL" IS USED, THE MANUFACTURER'S NAME AND PRODUCT IDENTIFICATION ARE USED TO ESTABLISH THE QUALITY, DESIGN FEATURES, AND PERFORMANCE OF THE EQUIPMENT AND MATERIALS SPECIFIED. PRODUCTS MANUFACTURED BY OTHERS WILL BE ACCEPTED PROVIDED THEY ARE EQUAL IN QUALITY, FEATURES, AND PERFORMANCE AND ARE APPROVED BY THE ENGINEER.
D. THE CONTRACTOR SHALL OBTAIN WRITTEN APPROVAL FROM THE ENGINEER TO USE ANY PROPOSED SUBSTITUTE MATERIAL OR EQUIPMENT BEFORE CONTRACTING TO PURCHASE SUCH SUBSTITUTES. THE ENGINEER RESERVES THE RIGHT TO REQUIRE THE REMOVAL OF ANY MATERIAL OR EQUIPMENT WHICH DOES NOT HAVE THIS WRITTEN APPROVAL AND WHICH DOES NOT COMPLY WITH THE SPECIFICATIONS, REGARDLESS OF THE STATE OF INSTALLATION OF SUCH EQUIPMENT.
E. WHERE EQUIPMENT SUPPLIED BY THE CONTRACTOR HAS CHARACTERISTICS OTHER THAN AS SPECIFIED HEREIN, THE CONTRACTOR SHALL, AT NO ADDITIONAL COST TO THE OWNER, MAKE ALL CHANGES IN THE ELECTRICAL WORK NECESSITATED BY THE SUBSTITUTION.

1.09 WORKMANSHIP

A. THE INSTALLATION SPECIFIED HEREIN SHALL BE PERFORMED IN A NEAT AND WORKMANLIKE MANNER BY PERSONS EXPERIENCED AND SKILLED IN THE TRADE. ONLY THE BEST QUALITY WORKMANSHIP WILL BE ACCEPTED. ALL EXPOSED COMPONENTS OF THE ELECTRICAL SYSTEMS SHALL BE SQUARE AND TRUE WITH BUILDING LINES AND SURFACES.

1.10 CORRELATION OF WORK

A. THE CONTRACTOR SHALL:
   1. GIVE CAREFUL CONSIDERATION TO THE WORK OF THE GENERAL, MECHANICAL, AND ALL OTHER CONTRACTORS AND SUBCONTRACTORS ON THE PROJECT AND SHALL ORGANIZE THE ELECTRICAL WORK SO THAT IT WILL NOT INTERFERE WITH THE WORK OF OTHER TRADES.
   2. CONSULT THE DRAWINGS AND SPECIFICATIONS FOR WORK OF OTHER TRADES FOR CORRELATION INFORMATION AND THE GENERAL CONSTRUCTION DRAWINGS FOR DETAILS, DIMENSIONS, ETC.
   3. VERIFY THE LOCATION OF ALL OUTLETS, WIRING, AND EQUIPMENT. NO ADDITIONAL COMPENSATION WILL BE ALLOWED FOR MOVING MISPLACED ELECTRICAL SYSTEM COMPONENTS.

1.11 SHOP DRAWINGS

A. THE CONTRACTOR SHALL SUBMIT SHOP DRAWINGS TO THE ENGINEER FOR ALL MAJOR ITEMS OF ELECTRICAL EQUIPMENT. THE DRAWINGS SHALL BE REVIEWED AND APPROVED, CONDITIONALLY APPROVED, OR DISAPPROVED BY THE ENGINEER. TWO (2) SETS OF THE REVIEWED DRAWINGS WILL BE RETAINED BY THE ENGINEER. THE REMAINDER WILL BE RETURNED TO THE CONTRACTOR. IN THE CASE OF DISAPPROVAL, THE CONTRACTOR SHALL SUBMIT NEW DRAWINGS, CORRECTED AS REQUIRED BY THE ENGINEER. ALL SHOP DRAWING SUBMITTALS SHALL ALLOW FOR A MINIMUM OF 7 WORKING DAYS FOR ENGINEER REVIEW. SUBMITTALS MAY BE IN PDF FORM.
B. THE CONTRACTOR SHALL REFER TO THE GENERAL CONDITIONS OF THESE SPECIFICATIONS FOR ANY OTHER REQUIREMENTS PERTINENT TO SHOP DRAWINGS. C. SHOP DRAWINGS SHALL BE DETAILED DIMENSIONED MANUFACTURERS' DRAWINGS, INCLUDING SCHEMATICS WHERE APPLICABLE. DRAWINGS AND SCHEMATICS SHALL BE LEGIBLE, USE STANDARD ELECTRICAL NOTATIONS, AND BE PREPARED IN A PROFESSIONAL MANNER. HANDWRITTEN SCHEDULES ARE NOT SUITABLE. EACH SET OF DOCUMENTS SHALL BE BOUND IN A PERMANENT MANNER WITH A TITLEP PAGE GIVING THE PROJECT NAME, PROJECT ADDRESS, AND CONTRACTOR'S NAME, ADDRESS, AND TELEPHONE NUMBER. A 3"X3" CLEAR SPACE SHALL BE PROVIDED FOR THE ENGINEER'S STAMP. AN INDEX PAGE SHALL ALSO BE INCLUDED IN EACH SET.

1.12 MAINTENANCE MANUAL

A. THE CONTRACTOR SHALL FURNISH THE OWNER WITH TWO (2) MANUALS COVERING THE OPERATION AND MAINTENANCE OF ALL EQUIPMENT PROVIDED UNDER THIS CONTRACT & IDENTIFIED BY THE OWNER AS REQUIRED. THE MANUALS SHALL BE 3-RING, LOOSE LEAF, HEAVY DUTY, STEEL PIANO HINGED NOTEBOOKS, HYTONE #8711 OR EQUAL AND SUBMITTED TO THE ARCHITECT/ENGINEER FOR APPROVAL. EACH MANUAL SHALL CONTAIN THE FOLLOWING:
   1. MANUFACTURER DATA: COMPLETE CATALOG DATA, MANUFACTURER'S LITERATURE, WIRING DIAGRAMS, DETAILED OPERATING INSTRUCTIONS, AND A COMPLETE LISTING OF SUPPLIERS AND DISTRIBUTORS WHERE REPLACEMENT PARTS OR MAINTENANCE SERVICES ARE AVAILABLE FOR ALL EQUIPMENT.
   2. INSPECTION CERTIFICATES: INSPECTION CERTIFICATES, SIGNED BY THE APPROPRIATE INSPECTOR, SHALL BE FURNISHED IN THE MAINTENANCE MANUAL.
   3. FIRE ALARM SYSTEM: WHERE A FIRE ALARM SYSTEM INSTALLATION OR MODIFICATION IS INCLUDED AS A PART OF THE CONTRACT, A LETTER FROM THE FIRE ALARM SYSTEM EQUIPMENT SUPPLIER OR INSTALLER SHALL BE FURNISHED STATING THAT THE SYSTEM HAS BEEN INSTALLED CORRECTLY, IS WORKING CORRECTLY, AND HAS BEEN THOROUGHLY CHECKED OUT. A COPY OF THIS LETTER SHALL BE INCLUDED IN EACH COPY OF THE MAINTENANCE MANUAL.
   4. AS-BUILT DRAWINGS: AS WORK PROGRESSES, THE CONTRACTOR SHALL MARK A SET OF CONSTRUCTION DOCUMENTS TO SHOW ACTUAL CIRCUIT ROUTING AND MAKEUP, EQUIPMENT LOCATION CHANGES, AND ANY OTHER CHANGES OR DEVIATIONS BETWEEN PROJECT WORK, AS BUILT, AND THE CONTRACT DOCUMENTS. MARKINGS SHALL BE NEAT, LEGIBLE, AND PERMANENT (INK OR INDELIBLE PENCIL). UPON COMPLETION OF THE WORK, THE CONTRACTOR SHALL SIMILARLY MARK A SECOND SET OF DOCUMENTS AND PROVIDE BOTH SETS OF DOCUMENTS TO THE OWNER WITH THE MAINTENANCE MANUALS.

1.13 GUARANTEE

A. THE CONTRACTOR SHALL FURNISH THE OWNER WITH A WRITTEN GUARANTEE FOR THE PERIOD OF ONE (1) YEAR AGAINST THE FAILURE OF ANY PART OF THE ELECTRICAL SYSTEMS INSTALLED UNDER THE SPECIFICATIONS DUE TO FAULTY MATERIAL OR WORKMANSHIP. GUARANTEE PERIOD SHALL START UPON SUBSTANTIAL COMPLETION OR AS SPECIFIED UNDER GENERAL AND SPECIAL CONDITIONS. LAMP BULBS SHALL BE OPERABLE ON THE START DATE OF, BUT EXCLUDED FROM, THE GUARANTEE.

1.14 CUTTING AND PATCHING

A. THE CONTRACTOR SHALL BE RESPONSIBLE FOR ALL CUTTING AND PATCHING NECESSARY FOR THE COMPLETION OF THIS PROJECT. NO STRUCTURAL MEMBERS SHALL BE DISTURBED WITHOUT OBTAINING WRITTEN PERMISSION OF THE ENGINEER.
B. ANY SURFACE WHICH IS DISTURBED IN ANY WAY BY THE CONTRACTOR SHALL BE REPAIRED AND REFINISHED TO PROVIDE A SURFACE EQUAL IN STRENGTH, DURABILITY, AND APPEARANCE TO THE ORIGINAL SURFACE.
C. WHERE IT IS NECESSARY TO DRILL OR CUT CONCRETE SURFACES, THE EDGES SHALL BE SHARPLY DEFINED. HOLES SHALL BE MADE WITH A ROTARY DRILL. CUTS SHALL BE MADE WITH A CONCRETE SAW UNLESS SOME OTHER METHOD OF MAKING SPECIFIC CUTS IS APPROVED BY THE ENGINEER.
D. ALL DISTURBED AREAS SHALL BE RETURNED TO THEIR ORIGINAL CONDITIONS AND SHALL BE REFINISHED TO MATCH SURROUNDING AREAS.
E. PENETRATIONS THROUGH SMOKE, FIRE, HAZARDOUS AREA, OR OTHER RATED SEPARATIONS SHALL BE SEALED TO PRESERVE THE RATINGS OF THE SEPARATIONS.
F. ALL CUTTING, DRILLING, PATCHING, REPAIRING, AND REFINISHING SHALL BE DONE BY PERSONS SKILLED IN APPROPRIATE TRADES.
G. THE CONTRACTOR SHALL CLEAN AWAY ALL RUBBISH AND LITTER CAUSED BY THIS INSTALLATION.

1.15 GENERAL RACEWAY REQUIREMENTS

A. ALL ELECTRICAL CONDUCTORS INSTALLED UNDER THESE SPECIFICATIONS SHALL BE IN ELECTRICAL RACEWAY, UNLESS SOME OTHER METHOD OF INSTALLATION IS SPECIFICALLY INDICATED. ALL RACEWAYS SHALL BE INSTALLED IN ACCORDANCE WITH THESE GENERAL REQUIREMENTS.
B. RACEWAY SHALL BE COMPLETE WITH NECESSARY COUPLINGS, CONNECTORS, BOXES, SUPPORTS, FITTINGS AND ALL OTHER COMPONENTS NEEDED FOR AN INTEGRAL RACEWAY SYSTEM. THE SYSTEM'S COMPONENTS SHALL BE DESIGNED FOR INTER-CONNECTION AND SHALL BE INSTALLED TO PROVIDE A NEAT APPEARING, MECHANICALLY FIRM ASSEMBLY ADHERING IN EVERY RESPECT TO PRINCIPLES OF GOOD ELECTRICAL PRACTICE, AND CONFORMING WITH PERTINENT RECOMMENDATIONS OF THE RACEWAY AND CONDUCTOR MANUFACTURERS.
C RACEWAY RUNS SHALL ORIGINATE AND TERMINATE AT LOCATIONS APPROXIMATELY AS SHOWN ON THE DRAWINGS. RUNS SHALL BE STRAIGHT AND TRUE WITH ELBOWS, OFFSETS AND BENDS, UNIFORM AND SYMMETRICAL. IN GENERAL, EXPOSED RUNS OF RACEWAY SHALL BE PARALLEL OR PERPENDICULAR TO SURROUNDING BUILDING LINES AND SURFACES. RUNS SHALL BE INSTALLED SO THAT THEY DO NOT INTERFERE WITH THE USE OF AISLES, PASSAGEWAYS, DOORWAYS, HATCHWAYS, WORKING AREAS, AND FLOORS IN GENERAL.
D. SUFFICIENT PULLBOXES AND JUNCTION BOXES OF ADEQUATE SIZE SHALL BE LOCATED AS NECESSARY TO ENSURE EASY INSTALLATION AND SPLICING OF CONDUCTORS. BOXES SHALL BE SIZED TO PROVIDE ADEQUATE FREE SPACE FOR ALL CONDUCTORS ENCLOSED. BOX SIZES SHALL NOT BE DETERMINED BY SCALING THE DRAWINGS.

1.16 METAL CONDUIT RACEWAY

A. METAL CONDUIT SHALL BE INSTALLED WHEREVER A RACEWAY IS REQUIRED, EXCEPT WHERE SOME OTHER TYPE OF RACEWAY IS SPECIFICALLY INDICATED. RIGID METAL CONDUIT SHALL BE ZINC-COATED STEEL CONDUIT COUPLED WITH CODE STANDARD DIE CUT THREADS.
B. ALL COMPONENTS OF CONDUIT RACEWAY SYSTEMS; SUCH AS CONDUIT, SEAL TIGHT CONDUIT, BOXES, SUPPORTS AND FITTINGS SHALL MEET IN EVERY RESPECT THE LATEST APPLICABLE STANDARD OF UNDERWRITERS LABORATORIES, INC. ALL STEEL COMPONENTS OF CONDUIT RACEWAY SYSTEMS SHALL BE HOT-DIPPED GALVANIZED, METALLIZED, SHERADIZED, OR ZINC-COATED BY SOME OTHER APPROVED MEANS. SEAL TIGHT CONDUIT SHALL HAVE SEPARATE GROUND CONDUCTOR.

1.17 PULLBOXES

A PULLBOXES SHALL BE INSTALLED AS REQUIRED IN LONG RUNS OR WHEN MORE THAN FOUR QUARTER BENDS OCCUR IN ANY CONDUIT RUN. ALL PULLBOXES SHALL BE SIZED TO CONFORM TO THE REQUIREMENTS OF ARTICLE 370 OF THE NATIONAL ELECTRIC CODE. PULLBOXES SHALL BE RECESSED IN ALL FINISHED PORTIONS OF THE BUILDING.

1.18 OPERATING INSTRUCTIONS & TESTING

A. OPERATING INSTRUCTIONS: THE CONTRACTOR SHALL FURNISH INSTRUCTION IN THE CARE, ADJUSTMENT, OPERATION, AND MAINTENANCE OF ALL PARTS OF THE ELECTRICAL EQUIPMENT. INSTRUCTION SHALL BE GIVEN TO EMPLOYEES DESIGNATED BY THE OWNER, AT NO ADDITIONAL COST TO THE OWNER, AND AT A TIME ACCEPTABLE TO THE OWNER, JUST PRIOR TO ACCEPTANCE OF THE EQUIPMENT BY THE OWNER.
B. TESTS: THE CONTRACTOR SHALL TEST THE EQUIPMENT INSTALLED UNDER THIS SPECIFICATION AND SHALL DEMONSTRATE ITS PROPER OPERATION TO THE ENGINEER. NO EQUIPMENT SHALL BE TESTED OR OPERATED FOR ANY PURPOSE UNTIL IT HAS BEEN FULLY PREPARED, CONNECTED, AND READIED FOR NORMAL OPERATION. ANY EQUIPMENT DAMAGED BY IMPROPER OR ILL-TIMED OPERATION OR TESTING SHALL BE REPAIRED OR REPLACED, AT THE CONTRACTOR'S EXPENSE, BEFORE FINAL INSPECTION AND ACCEPTANCE.

1.19 EXCAVATION AND BACKFILLING

A. THE CONTRACTOR SHALL PERFORM ALL EXCAVATION AND BACKFILLING FOR THE INSTALLATION OF ALL ELECTRICAL WORK INSTALLED IN EARTH, INCLUDING ALL CONDUITS, DIRECT BURIAL CABLES, DUCTS, AND MANHOLES SHOWN ON THE DRAWINGS. ALL CONDUIT OR CABLES BELOW GRADE EXTERIOR TO THE BUILDINGS SHALL BE 24 INCHES MINIMUM BELOW FINISH GRADE OR AS NOTED ON THE DRAWINGS.
B. THE CONTRACTOR SHALL DETERMINE THE LOCATION OF EXISTING UNDERGROUND UTILITIES IN THE AREA OF ANY CONTEMPLATED EXCAVATION. IF THESE UTILITIES ARE TO REMAIN IN PLACE, ADEQUATE MEANS OF PROTECTION SHALL BE PROVIDED DURING EXCAVATION OPERATIONS. IF INCORRECTLY CHARTED UTILITIES ARE ENCOUNTERED DURING EXCAVATION, THE ARCHITECT SHALL BE CONSULTED FOR DIRECTION.

1.20 UNDERGROUND MARKING

A. ALL UNDERGROUND ELECTRICAL LINES EXTERIOR TO THE BUILDING SHALL BE MARKED BY THE INSTALLATION OF A CONTINUOUS IDENTIFYING TAPE BURIED IN THE TRENCH ABOVE THE LINE. THE TAPE SHALL BE BURIED 6 INCHES BELOW FINISHED GRADE. THE TAPE SHALL BE MADE OF YELLOW OR ORANGE COLORED INERT PLASTIC, 6 INCHES WIDE, WITH THE WORDS "CAUTION BURIED ELECTRIC LINE BELOW" REPEATEDLY PRINTED ALONG THE LENGTH OF THE TAPE. THE TAPE SHALL BE GRIFFOLYN COMPANY "TERRATAPE" OR EQUAL.

PART 2 - PRODUCTS

2.01 DISCONNECT SWITCHES

A. THE CONTRACTOR SHALL FURNISH AND INSTALL DISCONNECT SWITCHES HAVING THE NUMBER OF POLES AND AMPERE RATINGS AS SHOWN ON THE DRAWINGS AND AS SPECIFIED IN THE EQUIPMENT SCHEDULE.
B. DISCONNECT SWITCHES RATED AT 30 AMPERES OR MORE SHALL BE HEAVY DUTY, AC, SINGLE THROW SAFETY SWITCHES, BUILT IN ACCORDANCE WITH NEMA REQUIREMENTS WITH A VOIDABLE FULL COVER INTERLOCK AND QUICK-MAKE, QUICK-BREAK MECHANISM. EACH SWITCH SHALL BE FUSIBLE UNLESS NONFUSIBLE (NF) SWITCH IS SPECIFICALLY INDICATED. SWITCHES SHALL BE IN NEMA 1 ENCLOSURES, EXCEPT THAT SWITCHES EXPOSED TO THE WEATHER SHALL BE IN NEMA 3 ENCLOSURES. DISCONNECT SWITCHES SHALL BE EQUAL TO "HEAVY-DUTY" AS MANUFACTURED BY WESTINGHOUSE, SQUARE-D, OR EQUAL.
C. DISCONNECT SWITCHES RATED AT 20A SHALL BE GENERAL USE, 20A, AC, SNAP SWITCH WIRING DEVICE. 2.02 FUSES A. THE CONTRACTOR SHALL FURNISH AND INSTALL FUSES OF THE TYPES AND RATINGS DESIGNATED IN THE DRAWINGS AND SPECIFICATIONS IN EACH FUSIBLE DEVICE INSTALLED BY THE CONTRACTOR. IN ADDITION, THE CONTRACTOR SHALL FURNISH AND STORE, AT A LOCATION DIRECTED BY THE OWNER, THREE (3) SPARE FUSES OF EACH SIZE AND TYPE INSTALLED DURING THIS PROJECT. THE CONTRACTOR SHALL PRESENT, TYPED ON HIS OWN LETTERHEAD, TWO (2) COPIES OF THE SPARE FUSE LIST TO THE OWNER FOR HIS RECORDS. B. FUSES SHALL BE ONE-TIME CARTRIDGE FUSES OF THE FOLLOWING TYPES AS MANUFACTURED BY THE ECONOMY DIVISION OF FPE CO., THE BUSSMAN DIVISION OF THE MCGRAW-EDISON COMPANY, OR EQUAL: TYPE DESIGNATION HEAVY-DUTY CURRENT LIMITING, TIME LAG HI CAP (HC) TWO ELEMENT, CURRENT LIMITING, TIME LAG LOW PEAK (LP) SINGLE ELEMENT, CURRENT LIMITING LIMITRON (CL) TWO ELEMENT, TIME LAG FUSETRON (F)

2.03 WIRE AND CABLE

A. ELECTRICAL CONDUCTORS INSTALLED UNDER THESES SPECIFICATIONS SHALL BE BUILDING WIRE, EXCEPT WHERE SOME OTHER TYPE OF WIRE OR CABLE IS SPECIFICALLY INDICATED.
B. BUILDING WIRE CONDUCTORS SHALL BE SOFT DRAWN ANNEALED COPPER, HAVING A CONDUCTIVITY OF NOT LESS THAN 98% PURE COPPER. CONDUCTOR SIZES ARE AMERICAN WIRE GAUGE (AWG), EXCEPT WHERE CONDUCTORS MCM IS INDICATED. NO CONDUCTORS SMALLER THAN #12 SHALL BE USED UNLESS SPECIFICALLY PERMITTED BY THE PLANS OR SPECIFICATIONS. CONDUCTORS LARGER THAN #10 SHALL BE STRANDED.
C. BUILDING WIRE INSULATION SHALL BE CODE GRADE 600. IN GENERAL, ALL CONDUCTORS SHALL HAVE THHN INSULATION UNLESS SPECIFICALLY NOTED OTHERWISE.

2.04 WIRING DEVICES

A. WIRING DEVICES SHALL BE INSTALLED IN METAL CONDUIT DEVICE BOXES.
B. SWITCHES AND RECEPTACLES SHALL BE ARROW-HART, GENERAL ELECTRIC, HUBBELL, PASS & SEYMOUR, LEVITON OR APPROVED EQUAL. UNLESS OTHERWISE SPECIFIED BELOW, COLOR SHALL BE AS SPECIFIED BY THE ARCHITECT.
C. ALL SWITCHES, EXCEPT AS NOTED HEREIN, SHALL BE SPECIFICATION GRADE, AC QUIET TYPE, 20A, 120/277V, WITH SILVER ALLOY CONTACTS, EQUAL TO HUBBELL #1221.
D. GENERAL PURPOSE DUPLEX RECEPTACLES SHALL BE SPECIFICATION GRADE NEMA 5-20R, 20A, 125V, 3-WIRE GROUNDING TYPE DEVICES, EQUAL TO HUBBELL #5362, WITH THE THIRD POLE GROUNDED TO THE OUTLET BOX. EACH RECEPTACLE SHALL BE RIGIDLY POSITIONED WITHIN THE BOX SO THAT THE EXPOSED FACE OF THE RECEPTACLE PROTRUDES BEYOND THE FACE OF THE COVER PLATE.
E. ISOLATED GROUND DUPLEX RECEPTACLES SHALL BE SPECIFICATION GRADE, 20A, 125V DEVICES, EQUAL TO HUBBELL #IG5362, ORANGE COLOR.
F. GFI RECEPTACLES: GROUND FAULT CIRCUIT INTERRUPTER DUPLEX RECEPTACLES SHALL BE SPECIFICATION GRADE, 20A DEVICES, EQUAL TO HUBBELL #GF5362, INSTALLED SO THAT EACH UNIT IS SELF CONTAINED. GFI RECEPTACLES SHALL NOT BE CONNECTED TO FEED-THRU UNLESS SPECIFICALLY SO NOTED ON THE DRAWINGS.
G. WEATHERPROOF DUPLEX RECEPTACLES SHALL BE GFI RECEPTACLES WITH STAINLESS STEEL OR CAST ALUMINUM WEATHERPROOF COVER PLATES EQUAL TO SIERRA #WP-8 OR #WPD-8 OR HUBBELL #WP26.
H. DEVICE HEIGHT SHALL BE AS FOLLOWS, UNLESS OTHERWISE NOTED ON THE PLANS (HEIGHT IS TO CENTER OF OUTLET ABOVE FINISHED FLOOR OR GRADE):
   1. SWITCHES ------------------------------------ 4'-0"
   2. CONVENIENCE OUTLETS ------------------------------ 2'-0"
   3. TELEPHONE OUTLETS ------------------------------- 2'-0"
   4. WEATHERPROOF RECEPTACLES (ABOVE GRADE) ------------------ 2'-0"
   5. THERMOSTATS ---------------------------------- 5'-0"

2.05 WALL AND COVER PLATES

A. THE CONTRACTOR SHALL FURNISH AND INSTALL NEW WALL PLATES FOR ALL NEW FLUSH MOUNTED WIRING DEVICES AND ALL FLUSH MOUNTED SPECIAL SYSTEM OUTLETS. SECTIONAL WALL PLATES SHALL NOT BE USED. BLANK PLATES SHALL BE INSTALLED OVER ALL OUTLETS PROVIDED FOR FUTURE USE OR OUTLETS ABANDONED BUT NOT REMOVED. WALL PLATES SHALL BE DECORS SERIES LEVITON. WALL PLATES SHALL BE SECURED WITH MATCHING SCREWS. ENGRAVED WALL PLATES SHALL HAVE BLACK FILL.
B. COVER PLATES FOR TELEPHONE, COMPUTER, TELEVISION, AND OTHER SPECIAL OUTLETS SHALL BE AS SPECIFIED BY OWNER.

2.06 MAGNETIC STARTERS

A. STARTERS SHALL BE BUILT IN ACCORDANCE WITH NEMA REQUIREMENTS. THEY SHALL CONTAIN MOTOR OVER-CURRENT PROTECTIVE DEVICES AS WELL AS THE NECESSARY NUMBER OF CONTACTS TO OPEN EACH UNGROUNDED MOTOR BRANCH CIRCUIT CONDUCTOR. OVER-CURRENT DEVICES SHALL BE EXTERNALLY OPERATED MANUALLY RESET THERMAL OVERLOAD RELAYS SIZED IN ACCORDANCE WITH MOTOR NAMEPLATE DATA TO PROVIDE MOTOR RUNNING CURRENT OVERLOAD PROTECTION. EACH STARTER CONTROLLING A 3-PHASE MOTOR SHALL BE EQUIPPED WITH THREE (3) OVER-LOAD PROTECTIVE DEVICES.
B. STARTERS SHALL BE INSTALLED IN SURFACE MOUNTING NEMA 1 ENCLOSURES UNLESS SOME OTHER TYPE OF ENCLOSURE IS INDICATED. STARTERS EXPOSED TO THE WEATHER SHALL BE IN NEMA 3 ENCLOSURES. STARTERS MOUNTED IN FINISHED AREAS SHALL BE IN FLUSH MOUNTING ENCLOSURES, EQUIPPED WITH SUITABLE COVER PLATES.
C. MAGNETIC STARTERS SHALL BE ACROSS-THE-LINE, FULL VOLTAGE TYPE UNLESS REDUCED VOLTAGE, MULTI-SPEED OR REVERSING STARTERS ARE SPECIFICALLY INDICATED. MAGNETIC STARTERS SHALL PROVIDE UNDER VOLTAGE PROTECTION AND SHALL HAVE AUXILIARY CONTACTS AS NECESSARY FOR THE OPERATION OF CONTROL AND INDICATING CIRCUITS. WHERE A CONTROL TRANSFORMER IS SPECIFIED, THE OPERATING COIL AND THE ENTIRE CONTROL CIRCUIT SHALL BE DESIGNED FOR 120 VOLT OPERATION.
D. AC MAGNETIC STARTERS: MOTOR STARTERS SHALL BE RATED IN ACCORDANCE WITH NEMA SIZES AND HORSEPOWER RATINGS.

2.07 MANUAL STARTERS

A. MANUAL STARTERS SHALL BE TOGGLE SWITCH TYPE STARTERS. WHERE A RED PILOT LIGHT IS INDICATED, THE LIGHT SHALL BE A NEON BULB INTEGRAL WITH THE STARTER. FLUSH MOUNTING UNITS SHALL HAVE ENGRAVED WALL PLATES. SURFACE MOUNTING UNITS SHALL BE IN NEMA 1 ENCLOSURES, UNLESS SOME OTHER TYPE OF ENCLOSURE IS INDICATED. MANUAL STARTERS SHALL BE CUTLER HAMMER BULLETIN 9101, SQUARE-D CLASS 2510, OR EQUAL.

2.08 PANELBOARDS

A. PANELBOARDS SHALL BE SQUARE D OR EQUAL BY CHALLENGER, CUTLER-HAMMER, GENERAL ELECTRIC, I.T.E., OR WESTINGHOUSE.
B. PANELBOARDS SHALL BE DEAD FRONT SAFETY TYPE WITH ENCLOSURES OF CODE GRADE STEEL. OVERSIZE GUTTERS SHALL BE PROVIDED FOR FEED THROUGH WHERE INDICATED OR REQUIRED. WHERE DOUBLE LUGS ARE NOT PERMITTED BY LOCAL CODE, A SUITABLE PULL BOX OR GUTTER ADJACENT TO PANELS SHALL BE PROVIDED FOR CONNECTIONS. TOP OF PANELBOARD TUBS SHALL BE 6'-6" ABOVE FINISHED FLOOR.
C. PANELBOARDS SHALL HAVE TRIM AND FLAT LOCKING DOORS WITH BOTH HINGES AND TRIM CLAMPS COMPLETELY CONCEALED. DOOR LOCKS SHALL BE FLUSH WITH THE COVER. ALL DOOR LOCKS SHALL BE COMMON KEYED. TWO (2) KEYS SHALL BE PROVIDED FOR EACH PANELBOARD. A CLEAR PLASTIC-COVERED TYPEWRITTEN CIRCUIT DIRECTORY SHALL BE MOUNTED IN A CARD HOLDER ATTACHED TO THE INNER SIDE OF THE DOOR. PANELBOARDS SHALL HAVE BLACK MICARTA PLATES WITH 1/2-INCH HIGH WHITE CUT LETTERS STATING PANELBOARD NUMBER AND VOLTAGE. WHERE PANELBOARDS ARE IN PUBLIC AREAS, IDENTIFICATION PLATES SHALL BE INSIDE DOOR.

D. BUSES SHALL BE MADE FROM 98 PERCENT ELECTROLYTIC COPPER OR 55 PERCENT CONDUCTIVITY ALUMINUM AND SHALL BE INDEPENDENTLY SUPPORTED (WITHOUT DEPENDENCE UPON THE CIRCUIT BREAKERS). SOLDERLESS LUGS ONLY SHALL BE PROVIDED IN ALL MAINS UNLESS NOTED OTHERWISE IN THE PANELBOARD SCHEDULE. ALL MAIN LUGS SHALL BE CRIMP COMPRESSION TYPE. WHERE BREAKERS AND/OR SWITCHES ARE LISTED IN THE SCHEDULES AS "SPACE ONLY", THIS SHALL INCLUDE EXTENDED BUS AND MOUNTING PROVISIONS.
E. CIRCUIT BREAKERS SHALL BE BOLT-ON AND SHALL HAVE BOLTED LINE AND LOAD TERMINALS. ALL BRANCH CIRCUIT BREAKERS SHALL BE QUICK-MAKE, QUICK-BREAK, THERMAL MAGNETIC, COMMON TRIP ON ALL MULTIPOLE BREAKERS AND HAVE A UL SHORT CIRCUIT RATING OF 10,000 SYMMETRICAL R.M.S. AMPERES. EACH BREAKER SHALL HAVE IT'S CURRENT RATING ENGRAVED, IN EASY TO READ NUMBERS, ON THE TOGGLE HANDLE. ALL BREAKERS USED FOR FLUORESCENT LIGHTING SWITCHING CONTROL SHALL BE UL LISTED SWD SWITCHING DUTY.
F. PANELS NOTED "ISOLATED GROUND BUS" SHALL CONTAIN A FACTORY INSTALLED ISOLATED GROUND BUS WHICH IS ELECTRICALLY INSULATED FROM THE PANEL ENCLOSURE AND NORMAL CONDUIT GROUNDING SYSTEM. THE CONTRACTOR SHALL PROVIDE A GROUNDING ELECTRODE AND AN INSULATED GROUND WIRE CONNECTION FROM THE ISOLATED GROUND BUS TO THE GROUNDING ELECTRODE FOR BRANCH CIRCUIT REQUIREMENTS.
G. CIRCUIT NUMBERS APPEARING ON DRAWINGS SHALL BE USED FOR REFERENCE ONLY. ACTUAL CONNECTIONS SHALL BE IN ACCORDANCE WITH PHASING OF THE CABINET, LOAD BALANCE AND COMMON NEUTRAL REQUIREMENTS. ROOM NUMBERS OR NAMES USED FOR CIRCUIT IDENTIFICATION SHALL CORRESPOND TO NAME PLATES INSTALLED ON ROOM DOORS BY THE GENERAL CONTRACTOR OR AS SELECTED BY THE OWNER AND SHALL BE VERIFIED AS THESE MAY NOT BE THE SAME AS ROOM TITLES ON THE DRAWINGS.

2.09 LIGHTING FIXTURES

A. LIGHTING FIXTURES, COMPLETE WITH LAMPS, SHALL BE FURNISHED AND INSTALLED WHERE SHOWN ON THE DRAWINGS. ALL FIXTURES SHALL BE UL LISTED FOR THE INTENDED USE.
B. LAMPS SHALL BE AS MANUFACTURED BY GENERAL ELECTRIC, SYLVANIA, WESTINGHOUSE, OR EQUAL. GENERAL SERVICE LAMPS SHALL BE RATED AT 120 VOLTS AND SHALL BE INSIDE FROSTED.
C. ALL FLUORESCENT BALLASTS SHALL HAVE THERMOSETTING BALLAST COMPOUND WHICH WILL NOT SOFTEN OR FLOW AT ELEVATED TEMPERATURES, SHALL BE RATED FOR VOLTAGE AS INDICATED, SHALL BE HIGH POWER FACTOR, CBM-ETL CERTIFIED, SHALL HAVE INDIVIDUAL AUTOMATIC-RESETTING THERMAL PROTECTION (UL CLASS P) AND SHALL HAVE A SOUND RATING OF "A" FOR RAPID START LAMPS AND HIGHEST SOUND RATING AVAILABLE FOR OTHER LAMPS.
D. ALL HIGH INTENSITY DISCHARGE LAMP BALLASTS SHALL BE HIGH POWER FACTOR, 90 OR HIGHER WITH A CREST FACTOR OF 1.75 OR LOWER.
E. FINISH OF ALL FIXTURES SHALL BE IN FIRST CLASS CONDITION AND SHALL BE GUARANTEED FOR A PERIOD OF ONE (1) YEAR FROM DATE OF ACCEPTANCE WHEN LAMPED NOT LARGER THAN MANUFACTURER'S RECOMMENDATIONS
F. CAPITAL LETTERS ADJACENT TO THE OUTLETS INDICATE FIXTURE TYPE; LOWER CASE LETTERS INDICATE MANNER OF SWITCHING.
G. LED FIXTURES SHALL BE OF THE LOW INRUSH CURRENT TYPE.

2.10 GROUNDING SYSTEMS

A. CIRCUITS, METAL RACEWAY SYSTEMS, AND ALL OTHER PERMANENTLY INSTALLED ELECTRICAL EQUIPMENT SHALL BE SOLIDLY GROUNDED IN ACCORDANCE WITH THE NATIONAL ELECTRICAL CODE TO FORM A CONTINUOUS, PERMANENT AND EFFECTIVE GROUNDING SYSTEM.
B. GROUNDING CONDUCTOR CONNECTIONS SHALL BE MADE WITH SOLDERLESS PRESSURE TYPE FITTINGS. WHERE WELDED CONNECTIONS ARE PRACTICAL, CONNECTIONS MAY BE MADE BY THE USE OF A SUITABLE WELDING PROCESS. ALL CONNECTIONS SHALL BE MADE IN STRICT CONFORMANCE WITH THE MANUFACTURER'S RECOMMENDATIONS.
C. TO MAINTAIN UNINTERRUPTED ELECTRICAL CONTINUITY, FLEXIBLE RACEWAY SECTIONS MUST HAVE CONDUCTANCE EQUAL TO THAT OF THE SYSTEM'S INFLEXIBLE RACEWAY. RACEWAY FITTINGS USED MUST BE SUCH AS TO ENSURE EXISTENCE OF A PERMANENT BOND. GROUNDING BUSHINGS SHALL BE PROVIDED TO GROUND CONDUITS TO CONTROL CENTER GROUND. ALL NEW EQUIPMENT SHALL BE GROUNDED TO THE EXISTING GROUNDING SYSTEM.

2.11 IDENTIFICATION AND LABELING OF ELECTRICAL EQUIPMENT

A. ALL CONTROL DEVICES AND DEVICE ENCLOSURES SHALL BE LABELED WITH INDIVIDUAL NAME PLATES OR LEGEND PLATES.
B. INDIVIDUAL NAME PLATES OR LEGEND PLATES SHALL BE ONE OF THE FOLLOWING TYPES:
   1. BLACK LAMINATED PLASTIC OR MICARTA WITH WHITE CUT LETTERS.
   2. CORROSION-RESISTANT METAL PLATES WITH ENGRAVED OR RAISED LETTERS AND BLACK FILL.
E. PAPER, FOIL, OR TAPE MARKERS ATTACHED WITH ADHESIVES SHALL NOT BE USED.

2.12 SERVICE TO ELECTRICALLY-POWERED EQUIPMENT

A. THE CONTRACTOR SHALL FURNISH AND INSTALL OUTLETS FOR AND MAKE CONNECTIONS TO ALL MOTORS AND POWER-OPERATED EQUIPMENT INDICATED ON THE EQUIPMENT SCHEDULE.
B. ALL ITEMS OF ELECTRICALLY POWERED EQUIPMENT, TOGETHER WITH THEIR CIRCUIT REQUIREMENTS, ARE LISTED IN THE EQUIPMENT SCHEDULE. IN GENERAL, EQUIPMENT LISTED UNDER "DESCRIPTION" IN THE SCHEDULE WILL BE FURNISHED UNDER OTHER DIVISIONS OF THE SPECIFICATIONS. ALL OTHER COMPONENTS LISTED IN THE SCHEDULE SHALL BE FURNISHED AND INSTALLED UNDER THIS SECTION OF THE SPECIFICATIONS.
C. THE "CONDUIT AND WIRE" LISTED IN THE SCHEDULE IS THE BRANCH CIRCUIT WIRING. THE BRANCH CIRCUIT SHALL TERMINATE IN AN OUTLET BOX, A DISCONNECT SWITCH, A STARTER, OR A RECEPTACLE, AS INDICATED IN THE EQUIPMENT SCHEDULE. THE CONTRACTOR SHALL FURNISH AND INSTALL ALL NECESSARY POWER AND CONTROL WIRING AND MAKE CONNECTIONS TO THE ITEM OF EQUIPMENT, UNLESS OTHERWISE INDICATED IN THE SCHEDULE.
a. EACH FUSIBLE "DISCONNECT SWITCH" (DISC.) LISTED IN THE SCHEDULE SHALL BE EQUIPPED WITH DUAL ELEMENT FUSES EXCEPT WHERE SOME OTHER TYPE OF FUSE IS INDICATED IN THE SCHEDULE OR ON THE DRAWINGS.
D. THE "STARTER SIZE" LISTED IN THE SCHEDULE IS NEMA SIZE OF THE MAGNETIC STARTER TO BE INSTALLED. THE DESIGNATION "MAN" INDICATES THE INSTALLATION OF A MANUAL STARTER. WHERE A MANUAL STARTER IS LOCATED WITHIN SIGHT OF THE MOTOR, IT SHALL BE USED AS THE MOTOR DISCONNECT SWITCH AS WELL AS OVERCURRENT PROTECTION.
E. THE CONTRACTOR SHALL OBTAIN EXACT INFORMATION PERTAINING TO LOCATION, ELECTRICAL CHARACTERISTICS, AND WIRING FOR EQUIPMENT FURNISHED BY OTHERS FROM THE CONTRACTOR FURNISHING THE EQUIPMENT. THIS INFORMATION SHALL BE VERIFIED BY EXAMINING NAMEPLATES AND MANUFACTURER'S WIRING DIAGRAMS. ANY DISCREPANCY BETWEEN THE EQUIPMENT REQUIREMENTS AND THE PROVISIONS MADE BY THESE SPECIFICATIONS SHALL BE REPORTED. EQUIPMENT DAMAGED AS A RESULT OF THE CONTRACTOR'S FAILURE TO OBSERVE MANUFACTURER'S REQUIREMENTS SHALL BE REPLACED OR REPAIRED BY THE CONTRACTOR. THE THERMAL PROTECTION ELEMENTS IN MAGNETIC AND MANUAL STARTERS SHALL BE RECHECKED WITH NAME PLATE DATA AT THE SITE BEFORE OPERATION OF THE EQUIPMENT. WHERE NECESSARY, THE THERMAL PROTECTION ELEMENTS SHALL BE CHANGED TO PROPERLY PROTECT THE EQUIPMENT.

INDUSTRIAL ENGINEERING, INC

MECHANICAL-ELECTRICAL CONSULTANTS

3210 23RD AVE SE
RIO RANCHO, NM 87124
WWW.IEINM.COM
INFO@IEINM.COM

14 OCT, 2019

NO	DATE	REVISION

CALIBERS COLLISION PAINT BOOTH

915 1ST ST NW
ALBUQUERQUE, NM

COPYRIGHT 2019 BY INDUSTRIAL ENGINEERING, INC. ALL RIGHTS RESERVED.

ELECTRICAL SPECIFICATIONS

FILE: XXX
DRAWN BY: Author
CHECKED BY: Checker
PROJ. NO: 59301
DRAWING NO:
DATE: 14 OCT, 2019

E3

BIM 360://59301 Caliber Collision Paint Booth/59301 Caliber Collision MEP.rvt
11/5/2019 8:30:32 AM